TWC640WP EcoSpeed&8kg
T1 heat-pump dryer:
8 kg I DirectSensor I Miele@home I EcoDry technology I FragranceDos



- Tested for 20 years of perfect laundry care*
- Heat pump technology – low consumption, gentle drying
- EcoSpeed efficiently reduces the drying time by 20 minutes**
- Complete app control of your tumble dryer with Miele@home***
- EcoDry for efficient performance over the entire tumble dryer service life****

* During the development phase of the W1 / W2 washing machine series, Miele tested models and core components in 5000 wash loads (= 5 wash loads per week for 50 weeks per year) in various programmes. More: miele.com/20years

** Time savings calculated compared to Miele tumble dryers without EcoSpeed with the same load size and similar energy efficiency. Tested in the "Cottons" programme with a full load size.

*** This is a separate digital offer from Miele & Cie. KG. The range of functions can vary depending on the model and the country. Acceptance of the Terms and Conditions and Privacy Policy for Miele digital products and services in the Miele app required. Miele reserves the right to change or discontinue the digital offer at any time.

**** Filter system patent EP 2 455 537

EAN: 4002516867562 / Material number: 12719120 /
Old Material Number: 12WC6402GB

General information	
Model identifier	TWC640WP EcoSpeed&8kg
Manufacturer material number	12719120
EAN number	4002516867562
Marketing class	Gold
Construction type	
Suitable for stacking	•
Door hinging	left, Reversible
Side-by-side	•
Slot-in	•
Model	
Product brand	T1 White Edition
Heat pump dryer	•
Design	
Appliance colour	Lotus white
Control panel colour	Lotus white
Door design	Obsidian black with white ring
Rotary selector colour	Lotus White
Control panel version	5° inclined
Control type	Rotary control
Display	DirectSensor white, 7 segment
Drying results	
PerfectDry precision drying	•
FragranceDos fragrance system	•
Intelligent drum reversal	•
Gentle laundry care	
Honeycomb drum	•
Load in kg	8
User convenience	
Networking with Miele@home	•
Wash2Dry	•
Delay start up to 24 hours	•
Time left display	•
Programme sequence indicator	No
Drum lighting	LED
Condensate container	•
Integrated condensed water drainage	•
AddLoad	•
Efficiency	
EcoDry technology	•
Maintenance-free heat exchanger	•
ProfiEco motor	•
EcoSpeed	•
Drying programmes	
Cottons (coloureds)	•

TWC640WP EcoSpeed&8kg
T1 heat-pump dryer:
8 kg I DirectSensor I Miele@home I EcoDry technology I FragranceDos



EAN: 4002516867562 / Material number: 12719120 /
Old Material Number: 12WC6402GB

Cottons arrow	•
Minimum iron	•
Delicates	•
Shirts	•
Woollens handcare	•
Express	•
Proofing	•
Bed linen	•
Warm air/DryFresh	•
Drying extras	
Anti-crease	•
Gentle tumble	•
Buzzer	•
Quality	
Soft ribs	•
Safety	
PIN-Code	•
Empty out container indicator	•
Clean filter indication	•
Optical interface	•
Technical data	
Dimensions (H x W x D) in mm	850 x 596 x 643
Dimensions in mm (width)	596
Dimensions in mm (height)	850
Dimensions in mm (depth)	643
Weight in kg	54
Voltage in V	220-240
Fuse rating in A	13
Frequency in Hz	50
Total rated load in kW	1,10
Length of supply lead in m	2,0
Hermetically sealed	•
Type of coolant	R290
Refrigerant quantity in kg	0,14
Refrigerant global warming potential in CO_2 e	3
Appliance global warming potential in CO_2 e	0,42
Replacing lamps	Service
Accessories included	
Fragrance flacon	•
Voucher for a second fragrance flacon	•

TWC640WP EcoSpeed&8kg
T1 heat-pump dryer:
8 kg I DirectSensor I Miele@home I EcoDry technology I FragranceDos

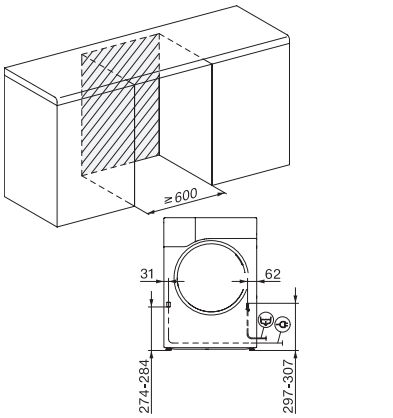

T1 installation drawing, facia 5 degree, measures in mm

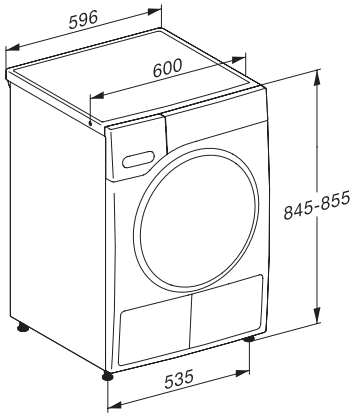

T1 drawing, facia 5 degree, measures in mm

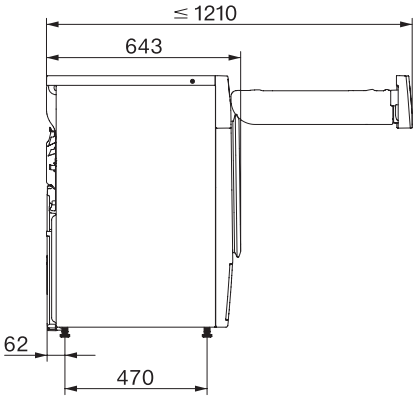

T1 drawing, facia 5 degree, with porthole, measures in mm

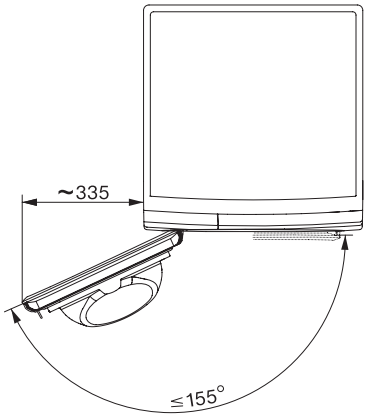

T1 drawing, facia 5 degree, measures in mm