KWT 2612 Vi
MasterCool wine conditioning unit
For high-end design and technology on a large scale.



- Push2open for convenient door-opening assistance
- Various wines at the perfect temperature – 3 temperature zones
- Flexible storage of large wine bottles thanks to FlexiFrame
- Light floods the interior thanks to LED elements – BrilliantLight
- Communication with appliances couldn't be easier – WiFiConn@ct

EAN: 4002516323365 / Material number: 11504100 /
Old Material Number: 36261205EU1

General information	
Model identifier	KWT 2612 Vi
Manufacturer material number	11504100
EAN number	4002516323365
Marketing class	Diamond
Appliance category	
Wine conditioning unit	•
Construction type	
Built-in appliance	•
Integrated appliance	•
Door hinge	Left
Convertible door hinging	•
Side-by-side enabled	•
Design	
Lighting	BrilliantLight
User convenience	
Networking with Miele@home	•
Operating concept	MasterSensor
Sabbath mode	•
DynaCool	•
SoftClose	•
Push2open	•
MaxLoad hinge	•
FlexiFrame	•
Number of FlexiFrame wooden racks	13
Rack material	Beech
NoteBoard	•
Control system	
No. of temperature zones	3
Min. temperature setting range in °C	5
Max. temperature setting range in °C	20
Efficiency	
Annual energy consumption in kWh	155,13
Energy consumption in 24 h in kWh	0,42
Safety	
Lock function	•
Acoustic door alarm	•
Acoustic temperature alarm	•
Optical door alarm	•
Optical temperature alarm	•
Technical data	
Niche width in mm min.	610
Niche width in mm max.	613
Niche height in mm min.	2134
Niche height in mm max.	2164
Niche depth in mm	629
Appliance width in mm	603
Appliance height in mm	2127

KWT 2612 Vi
MasterCool wine conditioning unit
For high-end design and technology on a large scale.



EAN: 4002516323365 / Material number: 11504100 /
Old Material Number: 36261205EU1

Appliance depth in mm	610
Weight in kg	151,0
Door hinge technology	Fixed door
Max. door front weight – refrigerator, in kg	73
Climate range	SN-T
Refrigerator compartment in l	370
Total usable capacity in l	441
0.75 l Bordeaux bottle capacity (no. of bottles)	104 bottles
Acoustic airborne noise emission class (A–D)	D
Sound emissions in dB(A) re 1 pW	42
Current consumption (mA)	3000
Voltage in V	220-240
Fuse rating in A	10
Number of phases	1
Frequency in Hz	50
Length of supply lead in m	3,0
Accessories included	
Water filter	Nein
Available display languages	
Available display languages via MultiLingua	□□□□□□□, □□, □□□□, deutsch, dansk, english, english (AU), english (CA), english (GB), english (US), eesti, suomi, français, français (CA), français (FR), ελληνικά, italiano, □□□, □□□, hrvatski, latviesu, lietuviu, bahasa malaysia, nederlands, norsk, polski, português, română, русский, svenska, srpski, slovenčina, slovenščina, español, čeština, türkçe, українська, magyar

KWT 2612 Vi
MasterCool wine conditioning unit
For high-end design and technology on a large scale.

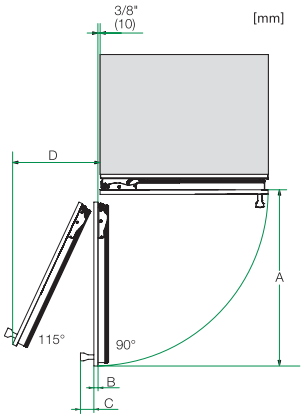

Opening angle 90°/115°, right side stop, MasterCool (Sketch) with footnote

A) Appliance door , K 2611 Vi, KWT 2611 Vi, KWT 2611 SF, KWT 2671 ViS: 677 mm (26 2/3 inch); , K 2612 Vi, KWT 2612 Vi, KWT 2612 SF, KWT 2672 ViS: 677 mm (26 2/3 inch);, K 2811 Vi, K 2811 SF, KF 2811 Vi, KF 2811 SF: 829 mm (32 2/3 inch);, K 2812 Vi, K 2812 SF, KF 2812 Vi, KF 2812 SF: 829 mm (32 2/3 inch);, K 2911 Vi, K 2911 SF, KF 2911 Vi, KF 2911 SF: 982 mm (38 2/3 inch);, K 2912 Vi, K 2912 SF, KF 2912 Vi, KF 2912 SF: 982 mm (38 2/3 inch);, B) Furniture front (max. 38 mm) (1 1/2 inch), C) Door handle, D) Distance from the door to the wall (without furniture front and door handle): , K 2611 Vi, KWT 2611 Vi, KWT 2611 SF, KWT 2671 ViS: 296 mm (11 2/3 inch);, K 2612 Vi, KWT 2612 Vi, KWT 2612 SF, KWT 2672 ViS: 296 mm (11 2/3 inch);, K 2811 Vi, K 2811 SF, KF 2811 Vi, KF 2811 SF: 363 mm (14 1/3 inch);, K 2812 Vi, K 2812 SF, KF 2812 Vi, KF 2812 SF: 363 mm (14 1/3 inch);, K 2911 Vi, K 2911 SF, KF 2911 Vi, KF 2911 SF: 428 mm (16 7/8 inch);, K 2912 Vi, K 2912 SF, KF 2912 Vi, KF 2912 SF: 428 mm (16 7/8 inch);, E) ONLY valid for SF versions: A + 25 mm (1 inch)

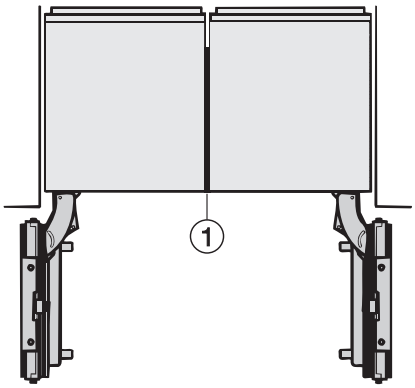

Side-by-side, MasterCool, without partition wall, with heating mat (Sketch) (with footnote)

1) Heating mat KSK 2001 (EU, AUS, CN) or KSK 2002 (US, CA, MX, BR)

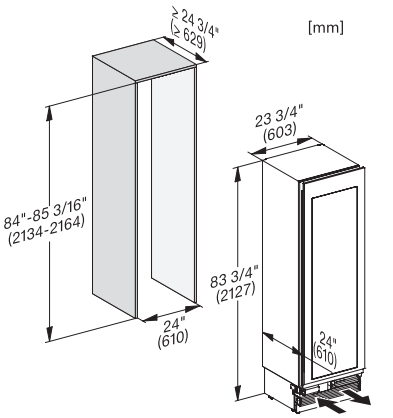

KWT2611Vi, KWT2671ViS, KWT2601Vi, KWT2661ViS, installation, MasterCool, installation drawings

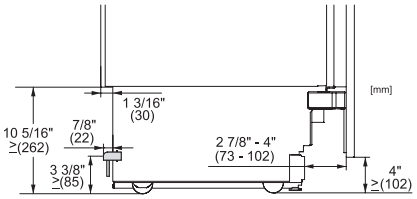

Sideview, MasterCool, Sketch

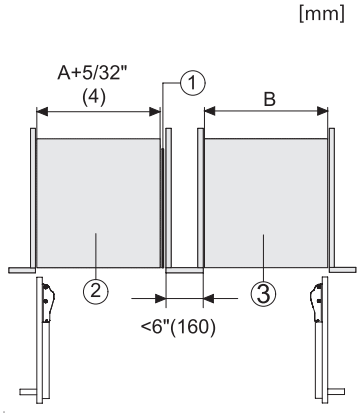

Side-by-Side, MasterCool, footnote, installation drawings

1. KSK 2001/2002, 2. Device A, 3. Device B, A = niche device A, B = niche device B

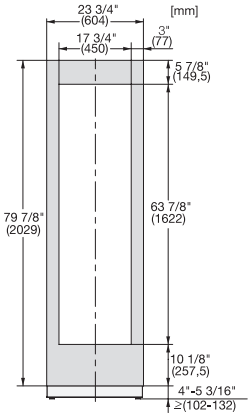

KFP2455ed/cs, KFP2454ed/cs, front panel, front dimensions, MasterCool, installation drawings

KWT 2612 Vi
MasterCool wine conditioning unit
For high-end design and technology on a large scale.

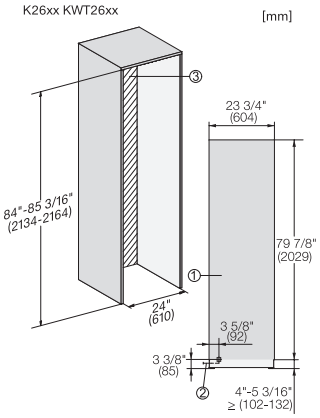

Installation, MasterCool, *footnote, installation drawings

1. View from the front, 2. Mains connection cable, L = 3000 mm (118 inch), 3. No water/ELT connections permitted in this area

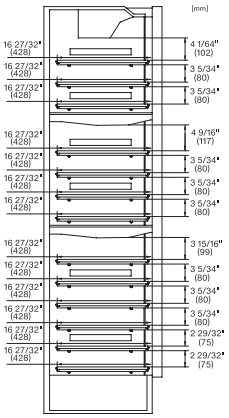

KWT2602Vi/SF, KWT2612Vi/SF, KWT2601Vi/SF, KWT2611Vi/SF, inner space, MasterCool, installation drawings

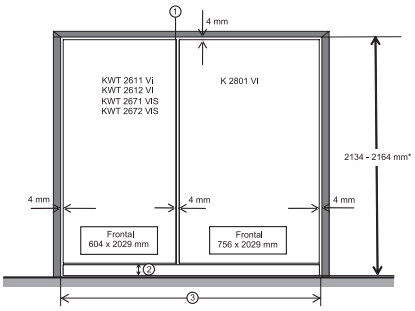

Example for diminsioning Side-by-side-Combination MasterCool (Sketch) (*footnote) (only for EUROPE)

*Niche height, 1 = Side-by-side fitting kit including pre-installed side wall heating KSK 200x, 2 = Furniture plinth height 102 - 132 mm (the appliance feet can be adjusted up to 30 mm high), 3 = Total appliance niche width 1366 mm (604 mm + 762 mm)