# KM 7373 FL
## Induction hob with onset controls with flex cooking area for large cookware



- Quick selection via numerical keybank – ComfortSelect
- 4 cooking zones incl. 1 flex cooking area
- A width of 800 mm for surface-mounted or flush-fit installation
- Communication with the cooker hood – automatic Con@ctivity function
- Convenient use of large cookware items thanks to combinable Flex cooking zones

EAN: 4002516733089 / Material number: 12399730 /
Old Material Number: 26737370GB

| | |
|---|---|
| **General information** | |
| Model identifier | KM 7373 FL |
| Manufacturer material number | 12399730 |
| EAN number | 4002516733089 |
| Marketing class | Silver |
| **Heating type** | |
| Heating type | Induction |
| **Construction type** | |
| Independent of cooker | • |
| **Design** | |
| Elegant glass ceramic surface | • |
| Ceramic surface colour | Black |
| Flush | • |
| Surface-mounted installation | • |
| **Cooking zone details** | |
| Number of cooking zones | 4 |
| Number of cooking areas | 1 |
| Maximum number of pans | 4 |
| **PowerFlex cooking zones** | |
| No. | 2 |
| Type | Flex cooking zone |
| Size in mm | Ø 110-210 |
| Max. rating in W | 2100 |
| Max. Booster power rating in W | 3000 |
| **1st cooking zone/cooking area** | |
| Position | front left |
| Type | Dual-circuit ring |
| Size in mm | Ø 110-220 |
| Max. rating in W | 2300 |
| Max. Booster power rating in W | 3000 |
| **2nd cooking zone/cooking area** | |
| Position | rear left |
| Type | Dual-circuit ring |
| Size in mm | Ø 90-160 |
| Max. rating in W | 1350 |
| Max. Booster power rating in W | 1850 |
| **3rd cooking zone/cooking area** | |
| Position | right |
| Type | Flex cooking zone |
| Size in mm | 210x400 |
| Max. rating in W | 3000 |
| Max. Booster power rating in W | 3650 |
| **User convenience** | |
| Networking with Miele@home | • |
| Con@ctivity | • |
| Pan and pan size recognition | • |
| Operation via sensor controls | ComfortSelect |
| Display colour | Yellow |

KM 7373 FL
Induction hob with onset controls
with flex cooking area for large cookware

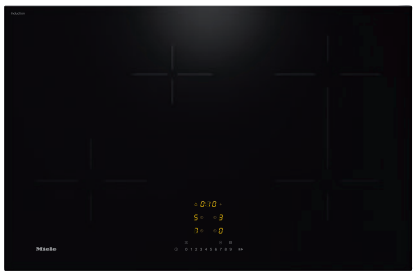

EAN: 4002516733089 / Material number: 12399730 /
Old Material Number: 26737370GB

| | |
|---|---|
| Permanent pan recognition | • |
| Stop & Go function | • |
| Recall function | • |
| Minute minder | • |
| Safety switch-off | • |
| Auto heat-up | • |
| Keeping warm | • |
| Individual setting options (e.g. buzzers) | • |
| **Efficiency** | |
| Residual heat utilisation | • |
| Power rating in off mode in W | 0,5 |
| Power rating in standby mode in W | 0,8 |
| Power rating in networked standby in W | 2,0 |
| Time until automatic switch to off mode in min | 10 |
| Time until automatic switch to standby in min | 10 |
| Time until automatic switch to networked standby in min | 10 |
| **Cleaning and care** | |
| Easy to clean ceramic glass | • |
| **Safety** | |
| Safety switch-off | • |
| Lock function | • |
| System lock | • |
| Integrated cooling fan | • |
| Overheating protection | • |
| Residual heat indicator | • |
| **Technical data** | |
| Dimensions in mm (width) | 800 |
| Dimensions in mm (height) | 53 |
| Dimensions in mm (depth) | 520 |
| Casing height incl. connection box in mm | 53 |
| Cutout dimensions in mm (width) with surface-mounted installation | 750 mm - 780 mm |
| Cutout dimensions in mm (depth) with surface-mounted installation | 490 mm - 500 mm |
| Internal cutout dimensions in mm (width) with flush installation | 780 |
| Internal cutout dimensions in mm (depth) with flush installation | 500 |
| Weight in kg | 11 |
| External cutout dimensions in mm (width) with flush installation | 804 |
| External cutout dimensions in mm (depth) with flush installation | 524 |
| Total rated load in kW | 7,30 |
| Length of supply lead in m | 1,4 |
| Voltage in V | 230 |
| Frequency in Hz | 50-60 |
| **Accessories included** | |
| Mains cable | Yes |

# KM 7373 FL
## Induction hob with onset controls with flex cooking area for large cookware

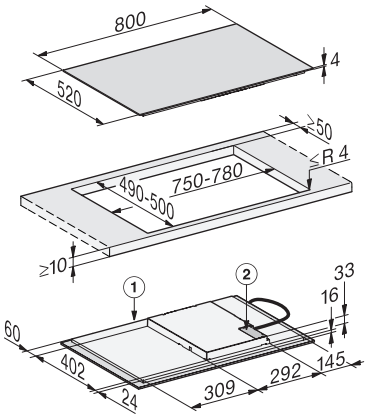


KM7373FL, KM7372FL surface-mounted (*Fußnote) (Installation drawing)

1) front, 2) Mains connection box, The mains connection cable (L = 1440 mm) is enclosed loose

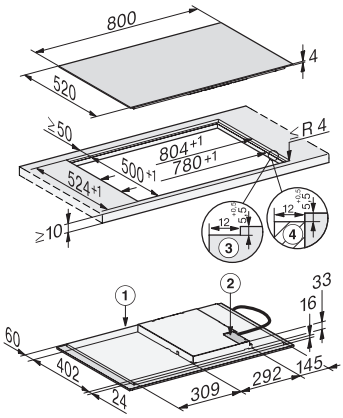


KM7373FL, KM7372FL flush (*Fußnote) (Installation drawing)

1) front, 2) Mains connection box, The mains connection cable (L = 1440 mm) is enclosed loosely, 3) Step milling natural stone worktop, 4) Wooden strip 12 mm (no supplied accessories)