H 2465 B ACTIVE
Oven
modern design with networking & PerfectClean at an attractive entry-level price.



- Clear text display with rotary controls – EasyControl Plus
- Particularly easy to clean – PerfectClean finish
- Network-enabled WiFi appliance – Miele@home
- Achieve perfect results with ease – automatic programmes
- For everything that is crunchy and crisp – AirFry operating mode

EAN: 4002516642923 / Material number: 12143630 /
Old Material Number: 22246504GB

General information	
Model identifier	H 2465 B ACTIVE
Manufacturer material number	12143630
EAN number	4002516642923
Marketing class	Silver
Construction type and design	
Active	•
Construction type and design	
Built-in oven	•
Colour	Obsidian black stainless steel effect
Convenience features	
Rapid heat-up	•
Operating modes	
Fan plus	•
Intensive bake	•
Conventional heat	•
Bottom heat	•
Fan grill	•
AirFry	•
Grill	•
Eco hot air	•
Automatic programmes	•
User convenience	
Networking with Miele@home	•
Display	EasyControl Plus
MultiLingua	•
Time of day display	•
Minute minder	•
Programmable start of cooking duration	•
Programmable end of cooking duration	•
Programmable cooking duration	•
Actual temperature display	•
Target temperature display	•
Buzzer when desired temperature is reached	•
Recommended temperature	•
Individual settings	•
Efficiency	
Energy efficiency class (A+++ – D)	A+
Power rating in off mode in W	0,3
Power rating in standby mode in W	0,8
Power rating in networked standby in W	2,0
Time until automatic switch to standby in min	20
Time until automatic switch to networked standby in min	20
Time until automatic switch to off mode in min	20
Cleaning and care	
Oven compartment with PerfectClean and catalytically enamelled liners	•

H 2465 B ACTIVE

Oven

modern design with networking & PerfectClean at an attractive entry-level price.



EAN: 4002516642923 / Material number: 12143630 /
Old Material Number: 22246504GB

CleanGlass door	•
Safety	
Appliance cooling system and touch-cool front	•
Safety switch-off	•
System lock	•
Technical data	
Oven compartment volume in l	76
Door hinge	Bottom
No. of shelf levels	5
Numbered shelf levels	•
Oven light	1 halogen spot
Plug type	3 pole without plug
Niche width min. in mm	560
Niche width max. in mm	568
Niche height min. in mm	590
Niche height max. in mm	595
Niche depth in mm	550
Weight in kg	42,0
Total rated load in kW	3,50
Length of supply lead in m	1,50
Voltage in V	220-240
Frequency in Hz	50
Fuse rating in A	16
Number of phases	1
Replacing lamps	Customer
Accessories included	
Universal tray with PerfectClean HUBB 71	1
Baking and roasting rack without PerfectClean	1
Removable side runners (pair)	1
Grilling and roasting insert with PerfectClean	1
Available display languages	
Available display languages via MultiLingua	□□□□□□□□, □□, □□□□, deutsch, dansk, english, suomi, français, ελληνικά, italiano, □□□, □□□, hrvatski, bahasa malaysia, nederlands, norsk, polski, português, română, русский, svenska, srpski, slovenčina, slovenščina, español, čeština, türkçe, українська, magyar

H 2465 B ACTIVE
Oven
modern design with networking & PerfectClean at an attractive entry-level price.

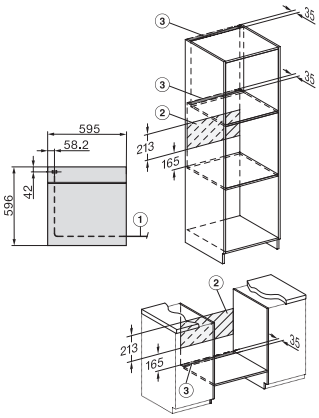

installation H7000 XL, installation drawing, GB, AU

1) Netzanschlussleitung, L=1500 mm, 2) In diesem Bereich kein Anschluss, 3) Lüftungsausschnitt min. 150 cm²

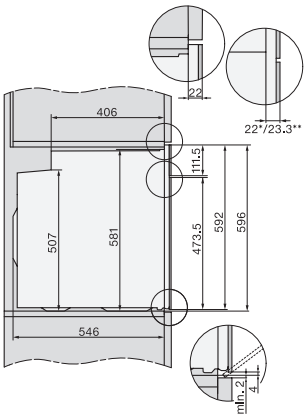

side view H7000 XL, installation drawings, GB, AU

22 mm – glass, 23.3 mm – metal

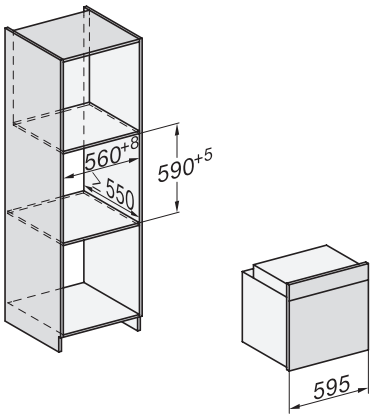

built-in H7000 XL, installation drawing

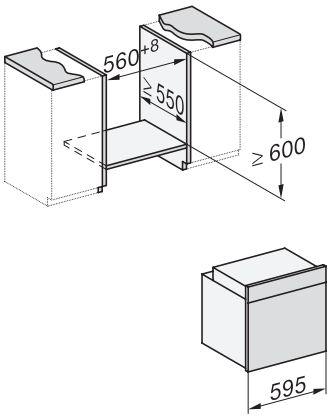

Installation H7000 XL underframe, installation drawings

If the oven is to be installed under a hob, follow the instructions for installing the hob and the height of the hob.

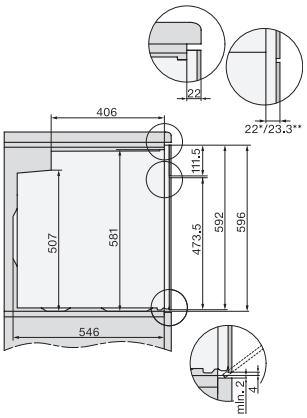

side view H7000 XL build-under, installation drawing, GB, AU

22 mm – glass, 23.3 mm – metal

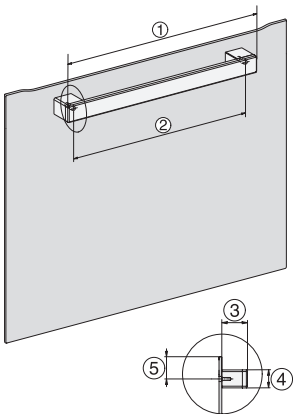

H2465B, H2465BP, H2466B, H2466BP, H2467B, H2467BP, H2468B, H2468BP, H2469B, H2469BP installation drawings

EU, 1) 399,6 mm, 2) 360 mm, 3) 45 mm, 4) 31,8 mm, 5) 32,5 mm, , EX, 1) 399.6 mm, 2) 360 mm, 3) 45 mm , 4) 31.8 mm, 5) 32.5 mm