G 5162 SCVi Selection
Fully integrated dishwashers
45 dB I Cutlery tray and basket I Comfort baskets I QuickIntenseWash I Delay start



- Tested for the equivalent of 20 years' service life*
- Flexible basket design perfect for everyday use – Comfort baskets
- Perfect results in less than one hour – QuickPowerWash
- Thanks to delay start, you can set a start time for the wash cycle up to 24 hours in advance
- Very easy door opening and closing – ComfortClose
- Drawer or basket? Both! You decide thanks to the additional cutlery basket

* During the development phase of the G 5000 and G 7000 dishwasher series, Miele tested models and core components in 5600 wash cycles (= 280 wash cycles per year over a period of 20 years) in various programmes. More at: miele.com/20years

EAN: 4002516610342 / Material number: 12153250 / Old Material Number: 21516262GB

General information	
Model identifier	G 5162 SCVi Selection
Manufacturer material number	12153250
EAN number	4002516610342
Marketing class	Silver
Model	
Fully integrated dishwasher	•
60 cm dishwasher	•
Design	
Control panel colour	Stainless Steel.
Control panel version	Fully integrated fascia
Control type	Programme selector button
Display	3-digit 7-segment display
Display colour	Yellow
Convenience	
Door closing aid	ComfortClose
Time left display	•
Delay start up to 24 hours	•
In-operation indicator	acoustic, Display
Efficiency	
Energy efficiency class (A–G)	D
Water consumption in the Automatic programme in l from	6,0
Water consumption of the ECO programme in litres per programme cycle	8,5
Electricity consumption in the ECO programme in kWh	0,84
Energy consumption of the ECO programme in kWh after 100 programme cycles	84
Consumption value in kWh in the ECO programme with hot water connection	0,57
Duration of ECO programme in minutes	265
Power rating with delay start in W	1,00
Power rating in off mode in W	0,30
Power rating in standby mode in W	0,30
Number of place settings	14
Noise emission class	C
Noise emissions in dB(A)	45
EcoPower Technology	•
Proven hygiene	•
Hot water connection	•
Half load	•
Quality of results	
Fresh water dishwasher	•
BrilliantGlassCare	•
Wash programmes	
QuickPowerWash	•
ECO	•
Automatic	•
Intensive 75 °C	•
Gentle	•

G 5162 SCVi Selection
Fully integrated dishwashers
45 dB I Cutlery tray and basket I Comfort baskets I QuickIntenseWash I Delay start



EAN: 4002516610342 / Material number: 12153250 / Old Material Number: 21516262GB

Dishwashing options	
Express	•
Extra Clean	•
Extra dry	•
Basket design	
Cutlery loading	Cutlery tray
Additional cutlery basket	•
FlexCare cup rack	1
Basket design	Comfort
Safety	
Waterproof system	•
Technical data	
Niche width minimal in mm	600
Niche width max in mm	600
Niche height minimal in mm	805
Niche height maximal in mm	870
Niche depth in mm	550
Appliance width in mm	598
Appliance height in mm	805
Appliance depth in mm	550
Depth with door open in cm	116,5
Net weight in kg	44,0
Total rated load in kW	2,00
Voltage in V	230
Fuse rating in A	10
Number of phases	1
Electrical frequency standard	50
Length of water inlet hose in m	1,50
Length of water drain hose in m	1,50
Length of supply lead in m	1,80
Min. front panel weight in kg	4,0
Max. front panel weight in kg	11,0
[can be retrofitted by Service to min.]	8,0
[can be retrofitted by Service to max.]	16,0
Accessories included	
Voucher for 1 x box of UltraTabs (20 tabs) or 3 boxes (60 tabs in each) at a reduced price	•

G 5162 SCVi Selection
Fully integrated dishwashers
45 dB I Cutlery tray and basket I Comfort baskets I QuickIntenseWash I Delay start

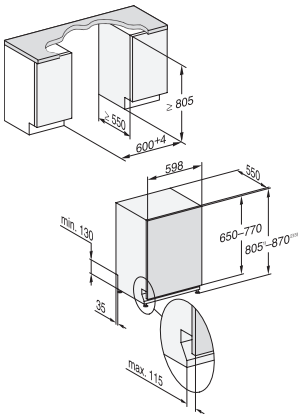

G7000, fully integrated dishwasher, 60cm (installation drawing)

1) Plinth height 35-155 mm, 2) Plinth height 100-220 mm, 3) Appliance height max. 930 mm with plinth height conversion kit (Mat.-Nr. 6.394.761),