WEK365 WCS PWash&10kg
W1 front-loader washing machine:
A I 10 kg I 1400 rpm I QuickPowerWash I Pre-ironing I honeycomb drum



EAN: 4002516789932 / Material number: 12392780 / Old Material Number: 11EK3651GB

- Tested for 20 years of perfect laundry care*
- Save energy in the best energy efficiency class (A)
- QuickPowerWash ensures fast, efficient results in just 49 minutes**
- The Pre-ironing Extra reduces creasing, saving up to 50 % time and effort***
- Gentle XXL laundry care with the Miele honeycomb drum – even for 10 kg loads

* During the development phase of the W1 / W2 washing machine series, Miele tested models and core components in 5000 wash loads (= 5 wash loads per week for 50 weeks per year) in various programmes. More: miele.com/20years

** This applies to all Miele washing machines that enable the process and machine-related parameters presented in the summary of the WL 1110/18 test report to be implemented.

*** Patent EP 2 088 231

General information	
Model identifier	WEK365 WCS PWash&10kg
Manufacturer material number	12392780
EAN number	4002516789932
Marketing class	Platinum
Construction type	
Suitable for stacking	•
Door hinging	right
Side-by-side	•
Slot-in	•
Can be built-under	•
Model	
Product brand	W1 Chrome Edition
Front-loader	•
Spinning	
Max. spin speed	1400
Rinse hold	•
Without spin function	•
Design	
Appliance colour	Lotus white
Control panel colour	Lotus white
Door design	Chrome
Rotary selector colour	Lotus White / Chrome ring
Control panel version	Straight
Control type	Rotary control
Display	DirectSensor white, 7 segment
Cleaning performance	
Innovative PowerWash technology	•
CapDosing portioned dispensing	•
Gentle laundry care	
Honeycomb drum	•
Load in kg	10
User convenience	
Networking with Miele@home	•
Delay start up to 24 hours	•
Time left display	•
Programme sequence indicator	•
AutoClean detergent drawer	•
AddLoad	•
Efficiency	
Energy efficiency class (A–G)	A
Weighted energy consumption per 100 operating cycles for the wash cycle in kWh	52
Weighted water consumption per cycle in l	52
Spin efficiency class (A–G)	B
Acoustic airborne noise emission class (spin cycle; A–D)	A
Sound emissions during spin cycle in dB(A) re 1 pW	71

WEK365 WCS PWash&10kg
W1 front-loader washing machine:
A I 10 kg I 1400 rpm I QuickPowerWash I Pre-ironing I honeycomb drum



EAN: 4002516789932 / Material number: 12392780 / Old Material Number: 11EK3651GB

Duration of the “ECO 40–60” programme at nominal capacity	239
Power rating in off mode in W	0,40
Power rating in networked standby in W	0,80
Low temperature wash "Cold" and "20 °C"	•
Automatic load control	•
Flow meter	•
Foam sensing	•
ProfiEco motor	•
Wash programmes	
QuickPowerWash	•
Cottons (coloureds)	•
Minimum iron	•
Delicates	•
Shirts	•
Woollens (hand-washable)	•
Express 20	•
Dark garments / Denim	•
Proofing	•
Drain / Spin	•
ECO 40-60	•
Washing extras	
Short	•
Pre-wash	•
Water plus	•
Additional rinse cycle	•
Pre-ironing with steam	•
Buzzer	•
Safety	
Water protection system	Watercontrol-System
Safety lock	•
PIN-Code	•
Optical interface	•
Technical data	
Dimensions (H x W x D) in mm	850 x 596 x 636
Dimensions in mm (width)	596
Dimensions in mm (height)	850
Dimensions in mm (depth)	636
Appliance depth in mm with opened door	1054
Appliance depth w/o door in mm	600
Weight in kg	93
Voltage in V	220-240
Fuse rating in A	13
Frequency in Hz	50
Total rated load in kW	2,10-2,40
Length of water inlet hose in m	1,60
Length of water drain hose in m	1,50
Length of supply lead in m	2

WEK365 WCS PWash&10kg
W1 front-loader washing machine:
A I 10 kg I 1400 rpm I QuickPowerWash I Pre-ironing I honeycomb drum



EAN: 4002516789932 / Material number: 12392780 / Old Material Number: 11EK3651GB

Accessories included	
3 Caps	•
Voucher for Miele detergent	•

WEK365 WCS PWash&10kg
W1 front-loader washing machine:
A I 10 kg I 1400 rpm I QuickPowerWash I Pre-ironing I honeycomb drum

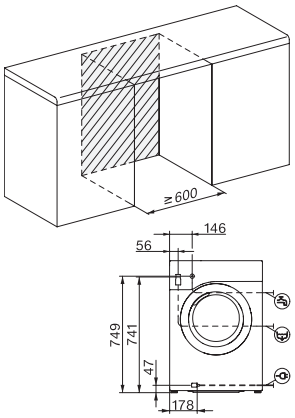

W1 installation drawing, slanted facia or straight facia, measures in mm

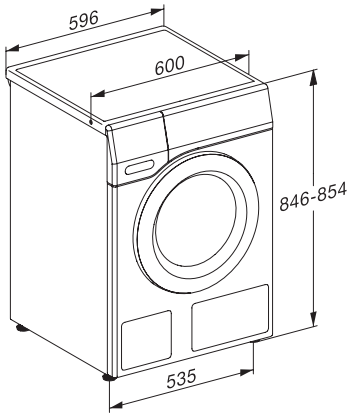

W1 drawing, slanted facia or straight facia, measures in mm

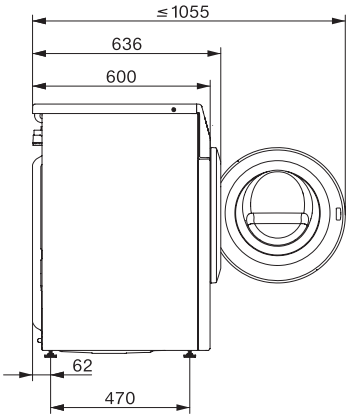

W1 drawing, slanted facia or straight facia, measures in mm

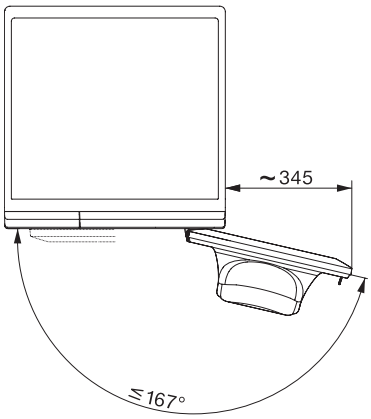

W1 drawing, slanted facia or straight facia, measures in mm