Miele

M 2240 SC

Built-in microwave oven
with sensor controls on the side for convenient operation.



- 7-segment display with sensor controls – EasySensor
- Perfect defrosting and cooking – Automatic programmes
- Food remains at serving temperature – keeping warm function
- Compact – 26 l oven compartment volume

EAN: 4002516103332 / Material number: 11093910 /
Old Material Number: 24224020GB

General information	
Model identifier	M 2240 SC
Manufacturer material number	11093910
EAN number	4002516103332
Marketing class	Silver
Construction type and design	
SideControl	•
Construction type and design	
Built-in microwave oven	•
Colour	Obsidian black
Convenience features	
Keeping warm	•
Operating modes	
Microwave	•
Automatic programmes	•
User convenience	
Display	EasySensor
Time of day display	•
Minute minder	•
Programmable cooking duration	•
Quick microwave	•
Individual settings	•
Efficiency	
Night dimming	•
Power rating in off mode in W	0,3
Power rating in standby mode in W	0,8
Time until automatic switch to standby in min	20
Cleaning and care	
Stainless steel oven compartment	•
Safety	
System lock	•
Safety switch-off	•
Safety lock "Door" warning	•
Technical data	
Oven compartment volume in l	26
Door hinge	Left
Oven light	1 LED spot
Turntable diameter in cm	32,5
Oven interior height in cm	20,7
Plug type	GB three-pin plug
Electronically controlled microwave power	•
Microwave power levels in W	80 /150 /300 /450 /600 /750 /900
Maximum microwave power in W	900
Niche width min. in mm	562
Niche width max. in mm	568
Niche-independent venting	•
Niche height min. in mm	450

M 2240 SC
Built-in microwave oven
with sensor controls on the side for convenient operation.



EAN: 4002516103332 / Material number: 11093910 /
Old Material Number: 24224020GB

Niche height max. in mm	452
Niche depth in mm	500
Appliance dimensions (W x H x D) in mm	595 x 452 x 401
Weight in kg	18,0
Total rated load in kW	1,4
Length of supply lead in m	1,60
Voltage in V	220-240
Frequency in Hz	50
Fuse rating in A	13
Number of phases	1
Mains cable with plug	•
Replacing lamps	Service
Accessories included	
Turntable	1

M 2240 SC

Built-in microwave oven
with sensor controls on the side for convenient operation.

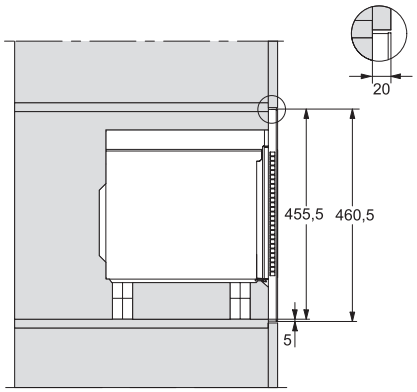

M2240SC, installation drawing

Cannot be combined horizontally with other units

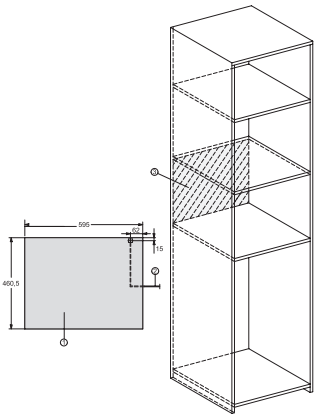

M2240SC, installation drawings

1) Front view, 2) Mains connection cable L=1,600 mm, 3) No connection in this area

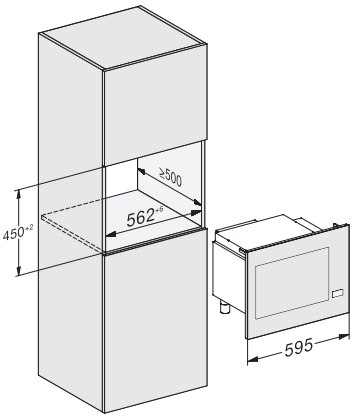

M2240SC, installation drawings