H 7840 BMX

Handleless microwave combination oven with a seamless design, automatic programmes and food probe



- Easy cleaning – compartment with PerfectClean & linen structure
- Network-enabled WiFi appliance – Miele@home
- Large touch display with movement sensor – M Touch + MotionReact
- Faster and more consistent results – Quick & Gentle
- Get what you want in one easy step – Quick MW and Popcorn button

EAN: 4002516713463 / Material number: 12310190 /
Old Material Number: 22784086GB

General information	
Model identifier	H 7840 BMX
Manufacturer material number	12310190
EAN number	4002516713463
Marketing class	Diamond
Construction type and design	
ArtLine	•
Handleless	•
Construction type and design	
Built-in microwave combination oven	•
Colour	Obsidian black matt
User convenience	
3 in 1	Oven, Microwave, Oven with microwave function
Convenience features	
Quick & Gentle	•
Rapid heat-up	•
Pre-heating	•
Food probe	With cable
Keeping warm	•
Crisp function	•
Operating modes	
Defrosting	•
Auto roast	•
Fan plus	•
Intensive bake	•
Low temperature cooking	•
Microwave	•
Microwave + Grill	•
Microwave + Fan plus	•
Microwave + Fan grill	•
Conventional heat	•
Bottom heat	•
Fan grill	•
Microwave with Auto roast	•
Special applications	•
Grill	•
Eco hot air	•
Automatic programmes	•
Country-specific automatic programmes	•
User convenience	
MotionReact movement sensor	•
Networking with Miele@home	•
Display	M Touch
SoftOpen	•
Touch2Open	•
MultiLingua	•
MyMiele	•

H 7840 BMX

Handleless microwave combination oven with a seamless design, automatic programmes and food probe



EAN: 4002516713463 / Material number: 12310190 /
Old Material Number: 22784086GB

Help function	•
Popcorn function	•
Polyphonic buzzers	•
Time of day display	•
Clock synchronisation	•
Date display	•
Minute minder	•
Programmable start of cooking duration	•
Programmable end of cooking duration	•
Programmable cooking duration	•
Actual temperature display	•
Target temperature display	•
Buzzer when desired temperature is reached	•
Recommended temperature	•
Suggestion microwave power	•
Quick microwave	•
User programmes	•
Individual settings	•
Efficiency	
Automatic residual heat utilisation	•
Power rating in off mode in W	0,3
Power rating in standby mode in W	0,8
Power rating in networked standby in W	2,0
Time until automatic switch to standby in min	20
Time until automatic switch to networked standby in min	20
Time until automatic switch to off mode in min	20
Cleaning and care	
Stainless-steel oven compartment with linen structure and PerfectClean	•
Hinged grill element	•
CleanGlass door	•
Safety	
Appliance cooling system and touch-cool front	•
Safety switch-off	•
System lock	•
Sensor lock	•
Technical data	
Oven compartment volume in l	43
No. of shelf levels	3
Oven light	1 LED spot
Temperatures in °C	30–250
Plug type	Schuko plug with earth
Electronically controlled microwave power	•
Microwave power levels in W	80 /150 /300 /450 /600 /850 /1000
Niche width min. in mm	560
Niche width max. in mm	568
Niche height min. in mm	450
Niche height max. in mm	452

Miele

H 7840 BMX

Handleless microwave combination oven with a seamless design, automatic programmes and food probe



EAN: 4002516713463 / Material number: 12310190 /
Old Material Number: 22784086GB

Niche depth in mm	550
Weight in kg	38,0
Total rated load in kW	3,20
Length of supply lead in m	2,00
Voltage in V	220-240
Frequency in Hz	50
Fuse rating in A	16
Number of phases	1
Mains cable with plug	•
Replacing lamps	Service
Accessories included	
Baking and roasting rack with PerfectClean	1
Wired food probe	1
Glass tray	2
Available display languages	
Available display languages via MultiLingua	□□□□□□□, □□, □□□□, deutsch, dansk, english, suomi, français, ελληνικά, italiano, □□□, □□□, hrvatski, bahasa malaysia, nederlands, norsk, polski, português, română, русский, svenska, srpski, slovenčina, slovenščina, español, čeština, türkçe, українська, magyar

H 7840 BMX

Handleless microwave combination oven with a seamless design, automatic programmes and food probe

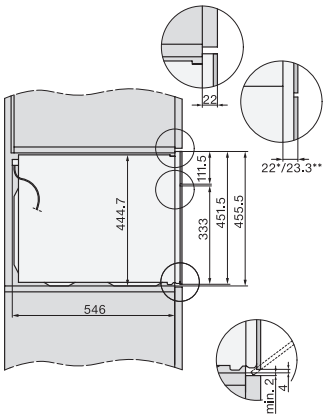

side view H7000 BM, installation drawings, GB, AUS

22 mm – glass, 23.3 mm – metal

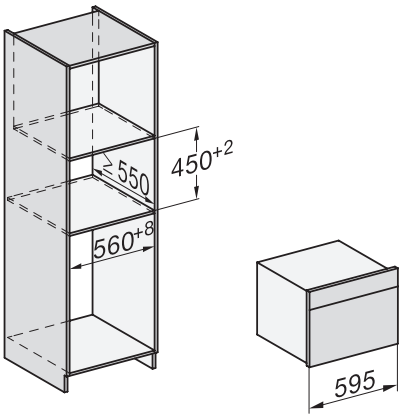

built-in H7000 BM, installation drawing

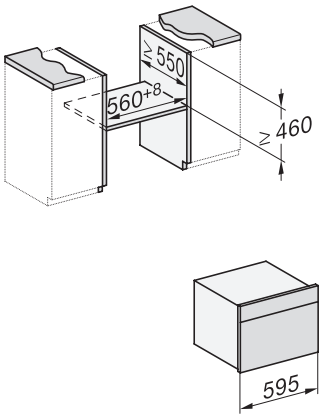

built-in H7000 BM build-under, installation drawings

If the oven is to be installed under a hob, follow the instructions for installing the hob and the height of the hob.

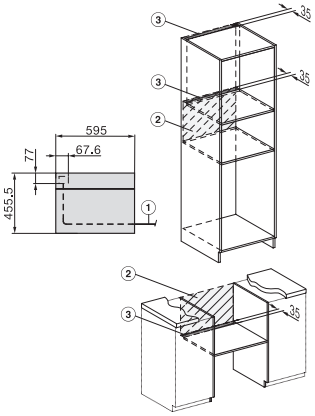

Installation H7000BM, installation drawings, GB, AUS

1) Mains connection cable, L=2000 mm, 2) No connection in this area, 3) Lüftungsausschnitt min. 150 cm²

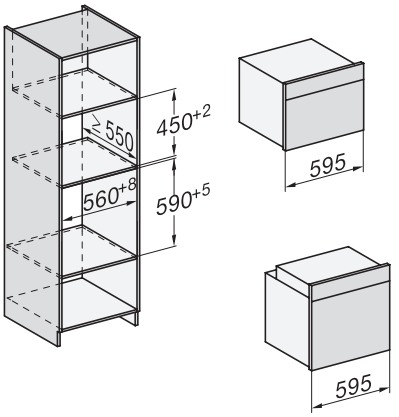

Installation H7000 BM XL, installation drawings

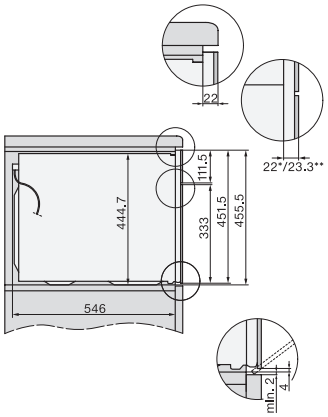

side view H7000 BM build-under, installation drawing, GB, AU

22 mm – glass, 23.3 mm – metal

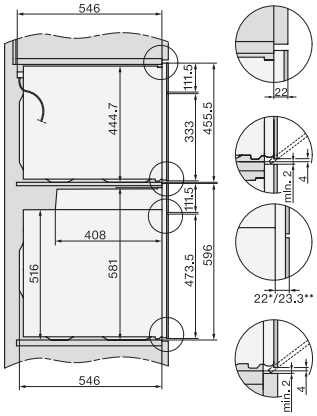

Side view Kombi BM XL, installation drawings

22 mm – glass, 23,3 mm – metal

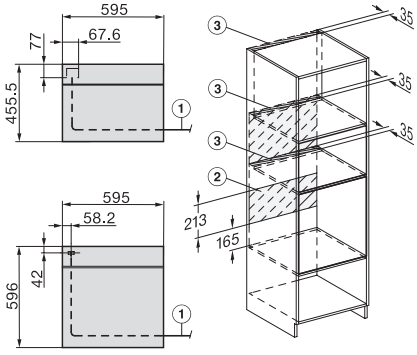

Installation Kombi BM XL, installation drawings

22 mm – glass, 23,3 mm – metal