DGM 7440

Steam oven with microwave
for healthy cooking and rapid heating-up with networking.



- Large clear text display with sensor controls – DirectSensor
- Perfect results – DualSteam technology
- Consistent and quick microwave results – Quick & Gentle
- Perfect results guaranteed every time – Automatic programmes
- Shorter cooking durations by combining steam with microwave power

EAN: 4002516166481 / Material number: 11094480 /
Old Material Number: 23744044GB

General information	
Model identifier	DGM 7440
Manufacturer material number	11094480
EAN number	4002516166481
Marketing class	Gold
Construction type and design	
PureLine	•
Construction type and design	
Steam oven with microwave	•
Colour	Stainless steel/Clean Steel
Convenience features	
Quick & Gentle	•
External steam generation	•
Menu cooking without transfer of taste	•
Automatic programmes with ability to make individual adjustments	•
Keeping warm	•
Operating modes	
Steam cooking	•
Microwave	•
Rapid cooking	•
Eco steam cooking	•
Defrosting	•
Reheat	•
Automatic programmes	•
Country-specific automatic programmes	•
Special applications	•
User convenience	
Networking with Miele@home	•
Display	DirectSensor
SoftOpen	•
MultiLingua	•
Popcorn function	•
Quantity-independent cooking	•
Steam cooking on up to 3 levels at the same time	•
Automatic menu cooking	•
Steam reduction before end of programme	•
Time of day display	•
Date display	•
Minute minder	•
Programmable start of cooking duration	•
Programmable end of cooking duration	•
Programmable cooking duration	•
Actual temperature display	•
Target temperature display	•
Buzzer when desired temperature is reached	•
Recommended temperature	•
Quick microwave	•

DGM 7440

Steam oven with microwave
for healthy cooking and rapid heating-up with networking.



EAN: 4002516166481 / Material number: 11094480 /
Old Material Number: 23744044GB

User programmes	•
Individual settings	•
Efficiency	
Power rating in off mode in W	0,3
Power rating in standby mode in W	0,8
Power rating in networked standby in W	2,0
Time until automatic switch to standby in min	20
Time until automatic switch to networked standby in min	20
Time until automatic switch to off mode in min	20
Cleaning and care	
Stainless steel/CleanSteel finish	•
Stainless-steel oven compartment with linen structure	•
External steam generator	•
Floor heater for condensate reduction	•
Soak programme	•
Quick-release side racks	•
Removable stainless-steel side racks	•
Descaling	•
CleanGlass door	•
Steam techn./water supply	
DualSteam	•
Fresh water container volume in l	1,5
Removal of fresh water container with Push2release	•
Safety	
Appliance cooling system and touch-cool front	•
Safety switch-off	•
System lock	•
Vapour cooling system	•
Sensor lock	•
Technical data	
Oven compartment volume in l	40
No. of shelf levels	4
Door hinge	Bottom
Oven light	2 LED spots
Steam-cooking mode temperatures min. in °C	40
Steam-cooking mode temperatures max. in °C	100
Electronically controlled microwave power	•
Microwave power levels in W	80 /150 /300 /450 /600 /850 /1000
Niche width min. in mm	560
Niche width max. in mm	568
Niche height min. in mm	450
Niche height max. in mm	452
Niche depth in mm	550
Appliance dimensions (W x H x D) in mm	595 x 455 x 569
Weight in kg	30,6
Total rated load in kW	3,30
Voltage in V	230
Frequency in Hz	50

DGM 7440
Steam oven with microwave
for healthy cooking and rapid heating-up with networking.



EAN: 4002516166481 / Material number: 11094480 /
Old Material Number: 23744044GB

Fuse rating in A	16
Number of phases	1
Mains cable with plug	•
Length of supply lead in m	2
Replacing lamps	Service
Accessories included	
Removable side runners (pair)	1
No. of perforated stainless-steel cooking container	2
Solid stainless steel cooking containers DGG 50 40	1
Wire rack	1
Glass tray DMGS 100 30	1
Descaling tablets	2
Available display languages	
Available display languages via MultiLingua	□□□□□□□, □□, □□□□, deutsch, dansk, english, suomi, français, ελληνικά, italiano, □□□, □□□, hrvatski, bahasa malaysia, nederlands, norsk, polski, português, română, русский, svenska, srpski, slovenčina, slovenščina, español, čeština, türkçe, українська, magyar

DGM 7440

Steam oven with microwave
for healthy cooking and rapid heating-up with networking.

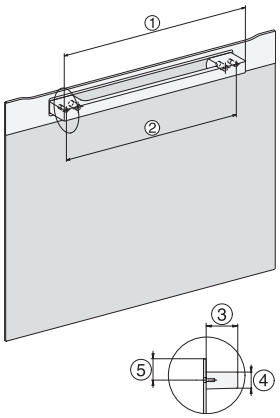

H7000 handle, installation drawing

1) 400 mm, 2) 360 mm, 3) 47 mm, 4) 24 mm, 5) 32.5 mm

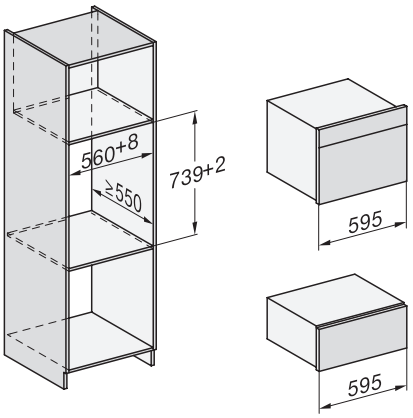

Installation DG, DGM, DGC XL, ESW7x20 installation drawings

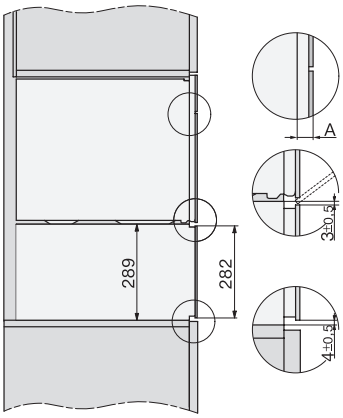

side view, DG, DGM, ESW7x20 installation drawings

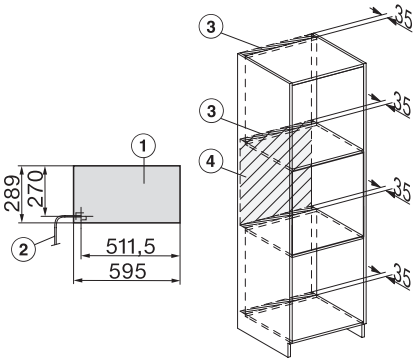

Installation, ESW7x20, DGM7x4x installation drawings

1) Front view, 2) Mains connection cable, L=2.000 mm, 3) Ventilation cut min. 180 cm², 4) No connection in this area

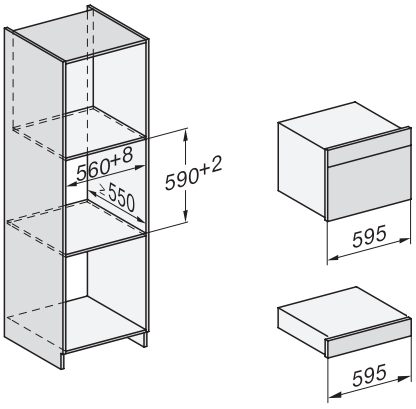

Installation_DG_DGM_DGC_XL_ESW7x10_EVS7010, installation drawings

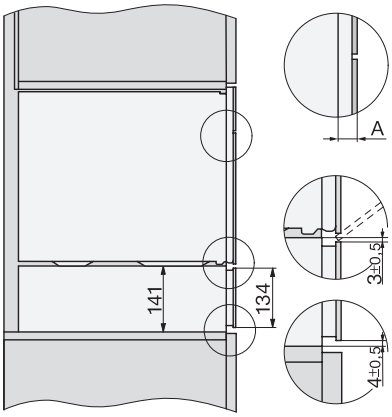

Side view_DG_DGM_ESW7x10_EVS7010 installation drawings

A) 22 mm glass, 23,3 mm stainless steel

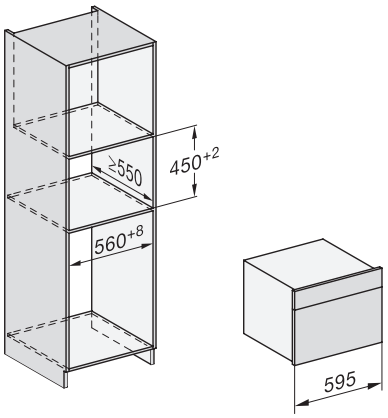

DG7xxx, DGM7xxx, installation drawings

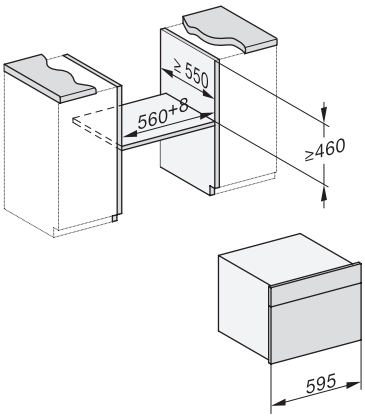

built-in DG DGM DGC XL build-under, installation drawing

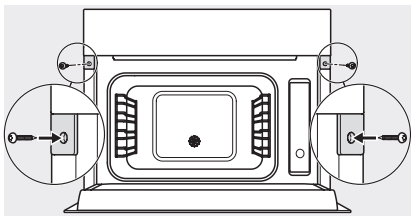

Screw joint DG DGM, installation drawing

DGM 7440

Steam oven with microwave
for healthy cooking and rapid heating-up with networking.

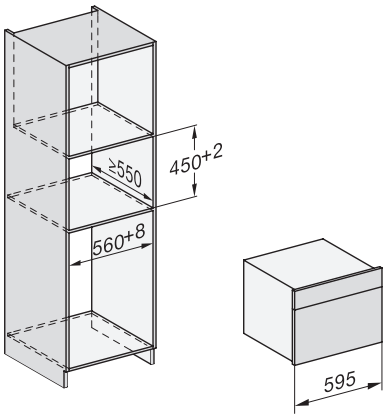

DG DGM, installation drawing

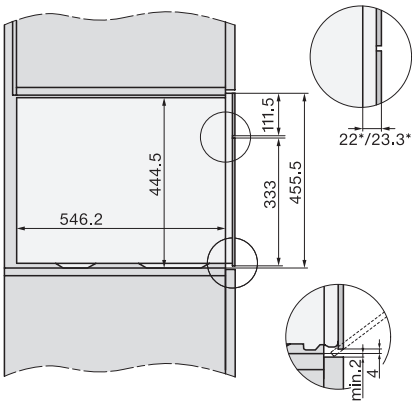

side view DG DGM, installation drawing, GB, AU

22 mm glass, 23,3 mm stainless steel

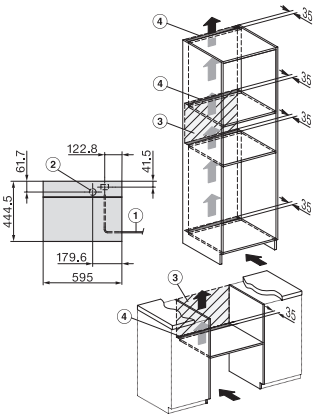

installation DGM, installation drawing, GB, AU

1) Mains connection cable, L=2000 mm, 2) Water supply hose, L=2000 mm, 3) ventilation cut-out min. 180 cm², 4) no connection in this area