KM 6522 FR

Electric hob with onset controls
with 1 extended zone and 1 Vario zone at an attractive entry level price.



- Easy operation – EasySelect
- Attractive design – 764 mm wide with all-round frame
- Very versatile – 4 cooking zones with 1 extended and 1 Vario zone
- Convenient – Auto heat-up for every cooking zone
- Safe – three level residual heat indicator for every cooking zone

EAN: 4002515996768 / Material number: 10881990 / Old Material Number: 26652210D

General information	
Model identifier	KM 6522 FR
Manufacturer material number	10881990
EAN number	4002515996768
Marketing class	Silver
Heating type	
Heating type	Electric
Construction type	
Independent of cooker	•
Design	
Elegant glass ceramic surface	•
Ceramic surface colour	Black
Stainless-steel frame	•
Surface-mounted installation	•
Cooking zone details	
Number of cooking zones	4
1st cooking zone/cooking area	
Position	front left
Type	Dual-circuit ring
Size in mm	Ø 120 / Ø 210
Max. rating in W	750/2200
2nd cooking zone/cooking area	
Position	rear left
Type	Single-circuit ring
Size in mm	Ø 145
Max. rating in W	1200
3rd cooking zone/cooking area	
Position	rear right
Type	Casserole area
Size in mm	Ø 170 / 170x265
Max. rating in W	1500/2400
4th cooking zone/cooking area	
Position	front right
Type	Single-circuit ring
Size in mm	Ø 180
Max. rating in W	1800
User convenience	
Operation via sensor controls	EasySelect
Extended cooking zone	•
Display colour	Yellow
Stop & Go function	•
Recall function	•
Minute minder	•
Safety switch-off	•
Auto heat-up	•
Individual setting options (e.g. buzzers)	•
Efficiency	
Residual heat utilisation	•

KM 6522 FR

Electric hob with onset controls
with 1 extended zone and 1 Vario zone at an attractive entry level price.



EAN: 4002515996768 / Material number: 10881990 / Old Material Number: 26652210D

Power rating in off mode in W	0,5
Power rating in standby mode in W	0,8
Power rating in networked standby in W	2,0
Time until automatic switch to off mode in min	10
Time until automatic switch to standby in min	10
Time until automatic switch to networked standby in min	10
Cleaning and care	
Easy to clean ceramic glass	•
Safety	
Safety switch-off	•
Lock function	•
System lock	•
Overheating protection	•
Residual heat indicator	•
Technical data	
Dimensions (H x W x D) in mm	43 x 764 x 504
Dimensions in mm (width)	764
Dimensions in mm (height)	43
Dimensions in mm (depth)	504
Casing height incl. connection box in mm	43
Cutout dimensions in mm (width) with surface-mounted installation	750 mm
Cutout dimensions in mm (depth) with surface-mounted installation	490 mm
Weight in kg	10
Total rated load in kW	7,60
Length of supply lead in m	1,4
Voltage in V	230
Frequency in Hz	50-60
Accessories included	
Razor-blade scraper	•
Mains cable	Yes

KM 6522 FR

Electric hob with onset controls
with 1 extended zone and 1 Vario zone at an attractive entry level price.

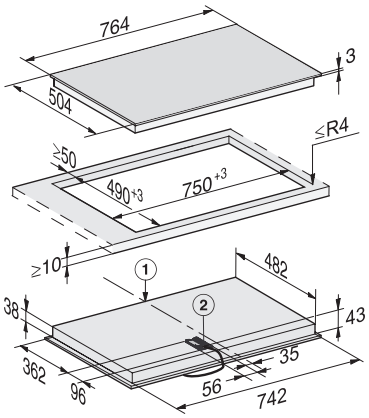

KM 6522 FR, KM 6542 FR (Installation drawing)

1) Front, 2) Mains connection box. Mains connection cable L = 1440 mm, built-in height = 43 mm