G 7130 SC Front AutoDos
Freestanding dishwashers
B I 43 dB I Cutlery tray I ExtraComfort baskets I AutoDos I Miele@home



EAN: 4002516738343 / Material number: 12423700 / Old Material Number: 21713018GB

- Tested for the equivalent of 20 years' service life*
- Convenient, great results and perfect for everyday use – ExtraComfort baskets
- Convenient, efficient, sustainable – perfect results with automatic dispensing from PowerDisk
- More information options and modern domestic appliance networking – Miele@home
- Perfect results in less than one hour – QuickPowerWash
- Completely dry – Miele AutoOpen drying

* During the development phase of the G 5000 and G 7000 dishwasher series, Miele tested models and core components in 5600 wash cycles (= 280 wash cycles per year over a period of 20 years) in various programmes. More at: miele.com/20years

General information	
Model identifier	G 7130 SC Front AutoDos
Manufacturer material number	12423700
EAN number	4002516738343
Marketing class	Gold
Model	
Freestanding dishwasher	•
60 cm dishwasher	•
Design	
Control panel colour	CleanSteel front
Control panel version	Straight fascia
Control type	Programme selector buttons
Display	1-line text display
Display colour	White
MultiLingua	•
Convenience	
Networking with Miele@home	•
Automatic dispensing with PowerDisk	•
Door closing aid	ComfortClose
Time left display	•
Delay start up to 24 hours	•
In-operation indicator	Display
Display language selection	•
Efficiency	
Energy efficiency class (A–G)	B
Water consumption in the Automatic programme in l from	6,0
Water consumption of the ECO programme in litres per programme cycle	8,4
Electricity consumption in the ECO programme in kWh	0,64
Energy consumption of the ECO programme in kWh after 100 programme cycles	64
Consumption value in kWh in the ECO programme with hot water connection	0,40
Duration of ECO programme in minutes	199
Power rating with delay start in W	0,90
Power rating in off mode in W	0,30
Power rating in standby mode in W	0,30
Power rating in networked standby in W	0,90
Number of place settings	14
Noise emission class	B
Noise emissions in dB(A)	43
EcoFeedback	•
EcoPower Technology	•
Proven hygiene	•
Hot water connection	•
Half load	•
Quality of results	
Fresh water dishwasher	•

G 7130 SC Front AutoDos
Freestanding dishwashers
B I 43 dB I Cutlery tray I ExtraComfort baskets I AutoDos I Miele@home



EAN: 4002516738343 / Material number: 12423700 / Old Material Number: 21713018GB

AutoOpen drying	•
SensorDry	•
Active condensation drying	•
BrilliantGlassCare	•
Wash programmes	
QuickPowerWash	•
ECO	•
Automatic	•
ComfortWash 45 °C	•
Intensive 75 °C	•
PowerWash	•
ComfortWash+ 55 °C	•
Gentle	•
ExtraQuiet 39 dB(A)	•
Appliance care	•
Rinse out salt	•
Dishwashing options	
AutoDos	•
BottleClean	•
Quick	•
IntenseZone	•
Extra Clean	•
Extra dry	•
Basket design	
Cutlery loading	3D MultiFlex tray
FlexCare glass holder	2
Basket design	ExtraComfort
MultiClip	•
FlexCare Glass & Bottle	•
XL Assist	•
Safety	
Waterproof system	•
Filter indicator light	•
Safety lock	•
Technical data	
Niche width minimal in mm	600
Niche width max in mm	600
Niche height minimal in mm	845
Niche height maximal in mm	880
Niche depth in mm	600
Appliance width in mm	598
Appliance height in mm	845
Appliance depth in mm	600
Depth with door open in cm	119,5
Net weight in kg	57,0
Total rated load in kW	2,00
Voltage in V	230
Fuse rating in A	10
Number of phases	1

G 7130 SC Front AutoDos
Freestanding dishwashers
B I 43 dB I Cutlery tray I ExtraComfort baskets I AutoDos I Miele@home



EAN: 4002516738343 / Material number: 12423700 / Old Material Number: 21713018GB

Electrical frequency standard	50
Length of water inlet hose in m	1,50
Length of water drain hose in m	1,50
Length of supply lead in m	1,80
Accessories included	
1 x PowerDisk	•
Voucher for 6 x PowerDisk	•
Available display languages	
Available display languages via MultiLingua	□□□□□□□, deutsch, english (AU), english (GB), □□□, bahasa malaysia

G 7130 SC Front AutoDos
Freestanding dishwashers
B I 43 dB I Cutlery tray I ExtraComfort baskets I AutoDos I Miele@home

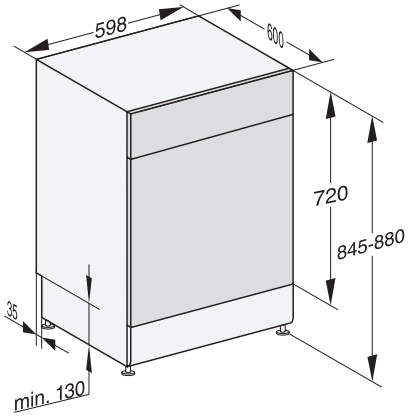

G7000, free standing dishwasher, 60cm (installation drawing)