CS 7632 FL
SmartLine element
with induction Tepan Yaki



- Intuitive quick selection via number sequences – Smart Select
- Elegant design – for flush or raised installation
- Seamlessly integrates with any SmartLine element
- Particularly versatile – 2 separately controlled teppan areas
- Short heating-up times – thanks to induction cooking

EAN: 4002515836293 / Material number: 10684420 /
Old Material Number: 27763250GB

General information	
Model identifier	CS 7632 FL
Manufacturer material number	10684420
EAN number	4002515836293
Marketing class	Platinum
Heating type	
Heating type	Induction
Construction type	
SmartLine	•
Design	
Elegant glass ceramic surface	•
Ceramic surface colour	Black
Flush	•
Surface-mounted installation	•
Stainless steel Tepan surface	•
1st cooking zone/cooking area	
Position	Centred
Type	Tepan area with induction
User convenience	
Operation via sensor controls	SmartSelect
Display colour	Yellow
Stop & Go function	•
Wipe protection	•
Recall function	•
Minute minder	•
Safety switch-off	•
Keeping warm	•
Individual setting options (e.g. buzzers)	•
Cleaning and care	
Easy to clean ceramic glass	•
Safety	
Safety switch-off	•
Lock function	•
System lock	•
Overheating protection	•
Residual heat indicator	•
Technical data	
Dimensions (H x W x D) in mm	60 x 378 x 520
Dimensions in mm (width)	378
Dimensions in mm (height)	60
Dimensions in mm (depth)	520
Cut-out dimensions (W x D) with flush-fit installation in mm	358/382 x 500/524
Casing height incl. connection box in mm	60
Internal cutout dimensions in mm (width) with flush installation	358
Internal cutout dimensions in mm (depth) with flush installation	500

CS 7632 FL
SmartLine element
with induction Tepan Yaki



EAN: 4002515836293 / Material number: 10684420 /
Old Material Number: 27763250GB

Weight in kg	8
External cutout dimensions in mm (width) with flush installation	382
External cutout dimensions in mm (depth) with flush installation	524
Total rated load in kW	2,80
Length of supply lead in m	1,5
Voltage in V	220-240
Frequency in Hz	50-60
Accessories included	
Mains cable	Yes

CS 7632 FL
SmartLine element
with induction Tepan Yaki

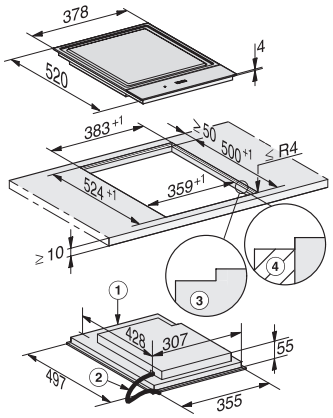

CS7632FL, flush (installation drawing)

1) Front, 2) Mains connection box with mains connection cable, L = 2000 mm, 3) Stepped cut-out, 4) Wooden frame 12 mm (supplied loose)

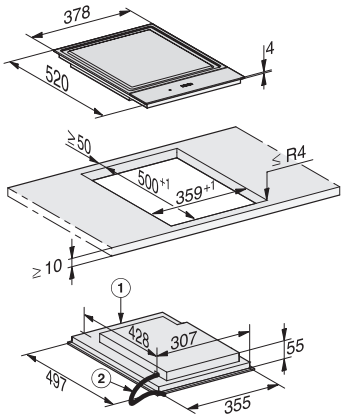

CS7632FL, flush (installation drawing)

1) Front, 2) Mains connection box with mains connection cable, L = 2000 mm

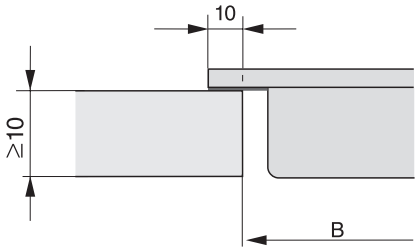

CS 7000 FL (Installation drawing)

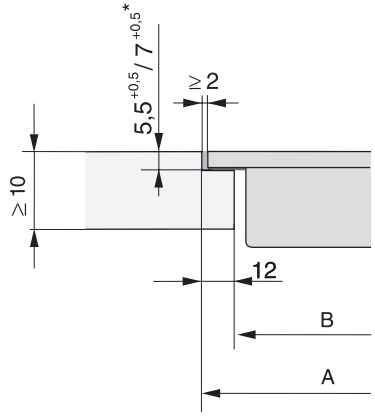

CS 7000 FL, flush (Installation drawing)

*7+0,5 = CS7611 (Wok)

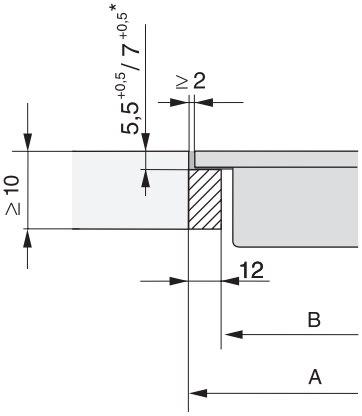

CS 7000 FL, flush (Installation drawing)

*7+0,5 = CS7611 (Wok)