# H 7840 BMX

## Handleless microwave combination oven with a seamless design, automatic programmes and food probe




- Large touch display with movement sensor – M Touch + MotionReact
- Easy cleaning – compartment with PerfectClean & linen structure
- Faster and more consistent results – Quick & Gentle
- Network-enabled WiFi appliance – Miele@home
- Get what you want in one easy step – Quick MW and Popcorn button

EAN: 4002516159339 / Material number: 11093750 /
Old Material Number: 22784066GB

| | |
|---|---|
| **General information** | |
| Model identifier | H 7840 BMX |
| Manufacturer material number | 11093750 |
| EAN number | 4002516159339 |
| Marketing class | Diamond |
| **Construction type and design** | |
| ArtLine | • |
| Handleless | • |
| **Construction type and design** | |
| Built-in microwave combination oven | • |
| Colour | Obsidian black |
| **User convenience** | |
| 3 in 1 | Oven, Microwave, Oven with microwave function |
| **Convenience features** | |
| Quick & Gentle | • |
| Rapid heat-up | • |
| Pre-heating | • |
| Food probe | With cable |
| Keeping warm | • |
| Crisp function | • |
| **Operating modes** | |
| Defrosting | • |
| Auto roast | • |
| Fan plus | • |
| Intensive bake | • |
| Low temperature cooking | • |
| Microwave | • |
| Microwave + Grill | • |
| Microwave + Fan plus | • |
| Microwave + Fan grill | • |
| Conventional heat | • |
| Bottom heat | • |
| Fan grill | • |
| Microwave with Auto roast | • |
| Special applications | • |
| Grill | • |
| Eco hot air | • |
| Automatic programmes | • |
| Country-specific automatic programmes | • |
| **User convenience** | |
| MotionReact movement sensor | • |
| Networking with Miele@home | • |
| Display | M Touch |
| SoftOpen | • |
| Touch2Open | • |
| MultiLingua | • |
| MyMiele | • |

# H 7840 BMX

## Handleless microwave combination oven with a seamless design, automatic programmes and food probe




EAN: 4002516159339 / Material number: 11093750 /
Old Material Number: 22784066GB

| | |
|---|---|
| Help function | • |
| Popcorn function | • |
| Polyphonic buzzers | • |
| Time of day display | • |
| Clock synchronisation | • |
| Date display | • |
| Minute minder | • |
| Programmable start of cooking duration | • |
| Programmable end of cooking duration | • |
| Programmable cooking duration | • |
| Actual temperature display | • |
| Target temperature display | • |
| Buzzer when desired temperature is reached | • |
| Recommended temperature | • |
| Suggestion microwave power | • |
| Quick microwave | • |
| User programmes | • |
| Individual settings | • |
| **Efficiency** | |
| Automatic residual heat utilisation | • |
| Power rating in off mode in W | 0,3 |
| Power rating in standby mode in W | 0,8 |
| Power rating in networked standby in W | 2,0 |
| Time until automatic switch to standby in min | 20 |
| Time until automatic switch to networked standby in min | 20 |
| Time until automatic switch to off mode in min | 20 |
| **Cleaning and care** | |
| Stainless-steel oven compartment with linen structure and PerfectClean | • |
| Hinged grill element | • |
| CleanGlass door | • |
| **Safety** | |
| Appliance cooling system and touch-cool front | • |
| Safety switch-off | • |
| System lock | • |
| Sensor lock | • |
| **Technical data** | |
| Oven compartment volume in l | 43 |
| No. of shelf levels | 3 |
| Oven light | 1 LED spot |
| Temperatures in °C | 30–250 |
| Plug type | 3 pole without plug |
| Electronically controlled microwave power | • |
| Microwave power levels in W | 80 /150 /300 /450 /600 /850 /1000 |
| Niche width min. in mm | 560 |
| Niche width max. in mm | 568 |
| Niche height min. in mm | 450 |
| Niche height max. in mm | 452 |

H 7840 BMX
Handleless microwave combination oven
with a seamless design, automatic programmes and food probe




EAN: 4002516159339 / Material number: 11093750 /
Old Material Number: 22784066GB

| | |
|---|---|
| Niche depth in mm | 550 |
| Weight in kg | 38,0 |
| Total rated load in kW | 3,20 |
| Length of supply lead in m | 2,00 |
| Voltage in V | 220-240 |
| Frequency in Hz | 50 |
| Fuse rating in A | 16 |
| Number of phases | 1 |
| Replacing lamps | Service |
| **Accessories included** | |
| Baking and roasting rack with PerfectClean | 1 |
| Wired food probe | 1 |
| Glass tray | 2 |
| **Available display languages** | |
| Available display languages via MultiLingua | □□□□□□□□, □□, □□□□, deutsch, dansk, english, suomi, français, ελληνικά, italiano, □□□, □□□, hrvatski, bahasa malaysia, nederlands, norsk, polski, português, română, русский, svenska, srpski, slovenčina, slovenščina, español, čeština, türkçe, українська, magyar |

# H 7840 BMX

## Handleless microwave combination oven with a seamless design, automatic programmes and food probe

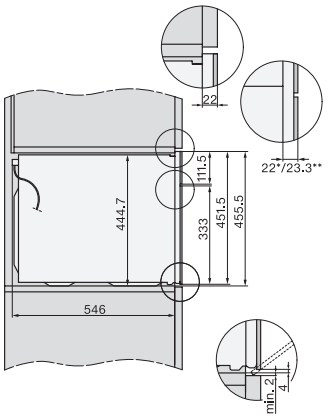


side view H7000 BM, installation drawings, GB, AUS

22 mm – glass, 23.3 mm – metal

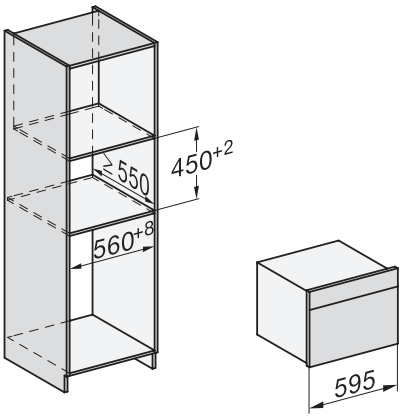


built-in H7000 BM, installation drawing

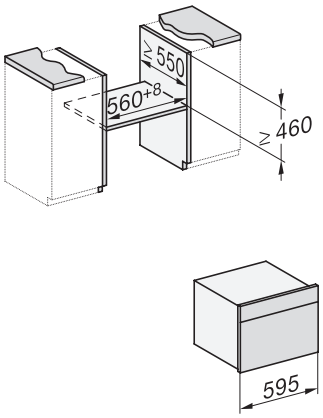


built-in H7000 BM build-under, installation drawings

If the oven is to be installed under a hob, follow the instructions for installing the hob and the height of the hob.

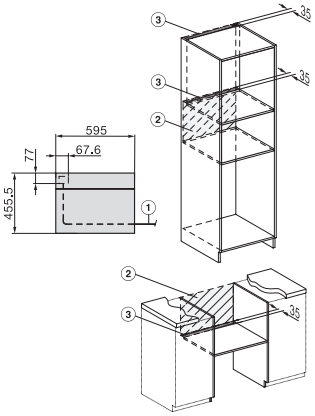


Installation H7000BM, installation drawings, GB, AUS

1) Mains connection cable, L=2000 mm, 2) No connection in this area, 3) Lüftungsausschnitt min. 150 cm²

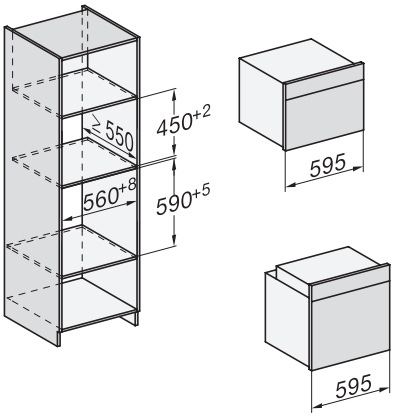


Installation H7000 BM XL, installation drawings

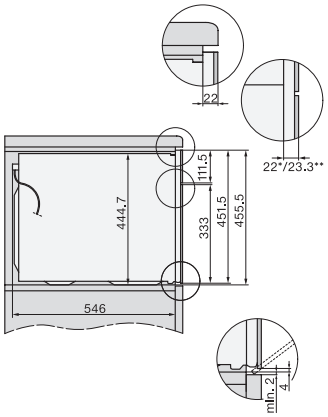


side view H7000 BM build-under, installation drawing, GB, AU

22 mm – glass, 23.3 mm – metal

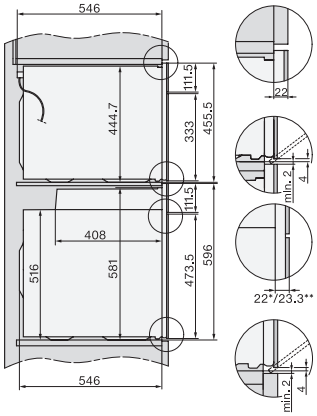


Side view Kombi BM XL, installation drawings

22 mm – glass, 23,3 mm – metal

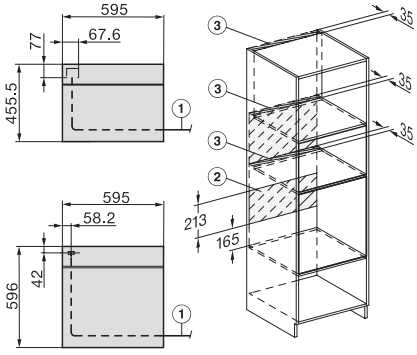


Installation Kombi BM XL, installation drawings

22 mm – glass, 23,3 mm – metal