Miele

# DGC 7460 HCX Pro

Handleless combination steam oven
for steam cooking, baking, roasting with networking + HydroClean.




- Large clear text display with sensor controls – DirectSensor
- Perfect results – DualSteam technology
- Crispy outside, succulent inside – combination cooking
- Convenient operation – water container behind automatic panel
- Easy cleaning – HydroClean and stainless steel oven compartment

EAN: 4002516835387 / Material number: 12641100 /
Old Material Number: 23746099GB

| | |
|---|---|
| **General information** | |
| Model identifier | DGC 7460 HCX Pro |
| Manufacturer material number | 12641100 |
| EAN number | 4002516835387 |
| Marketing class | Gold |
| **Construction type and design** | |
| ArtLine | • |
| Handleless | • |
| **Construction type and design** | |
| Steam combination oven | • |
| Colour | Pearl beige |
| **Convenience features** | |
| Rapid heat-up | • |
| Pre-heating | • |
| External steam generation | • |
| Oxygen sensor | • |
| Individual humidity settings in combination cooking | • |
| Menu cooking without transfer of taste | • |
| Mix & Match | • |
| Automatic programmes with ability to make individual adjustments | • |
| Keeping warm | • |
| Crisp function | • |
| **Operating modes** | |
| Fan plus | • |
| Conventional heat | • |
| Steam cooking | • |
| Combination cooking | • |
| Combination cooking with Fan plus | • |
| Combination cooking with Conventional heat | • |
| Combination cooking with grill large | • |
| Sous-vide | • |
| Intensive bake | • |
| Fan grill | • |
| Grill | • |
| Economy grill | • |
| Top heat | • |
| Bottom heat | • |
| Cake plus | • |
| Eco hot air | • |
| Eco steam cooking | • |
| Defrost | • |
| Roast with moisture | • |
| Reheat | • |
| Plate warming | • |
| Automatic programmes | • |
| Country-specific automatic programmes | • |
| Special applications | • |

DGC 7460 HCX Pro
Handleless combination steam oven
for steam cooking, baking, roasting with networking + HydroClean.




EAN: 4002516835387 / Material number: 12641100 /
Old Material Number: 23746099GB

| | |
|---|---|
| **User convenience** | |
| Networking with Miele@home | • |
| Display | DirectSensor |
| SoftOpen | • |
| Touch2Open | • |
| MultiLingua | • |
| Motorised lift-up control panel with SoftClose | • |
| Quantity-independent cooking | • |
| Steam cooking on up to 4 levels at the same time | • |
| Automatic menu cooking | • |
| Steam reduction before end of programme | • |
| Time of day display | • |
| Date display | • |
| Minute minder | • |
| Programmable start of cooking duration | • |
| Programmable end of cooking duration | • |
| Programmable cooking duration | • |
| Actual temperature display | • |
| Target temperature display | • |
| Buzzer when desired temperature is reached | • |
| Recommended temperature | • |
| User programmes | • |
| Individual settings | • |
| **Efficiency** | |
| Energy efficiency class (A+++ – D) | A+ |
| Power rating in off mode in W | 0,3 |
| Power rating in standby mode in W | 0,8 |
| Power rating in networked standby in W | 2,0 |
| Time until automatic switch to standby in min | 20 |
| Time until automatic switch to networked standby in min | 20 |
| Time until automatic switch to off mode in min | 20 |
| **Cleaning and care** | |
| Stainless-steel oven compartment with linen structure | • |
| Hinged grill element | • |
| External steam generator | • |
| HydroClean | • |
| Soak programme | • |
| Rinse programme | • |
| Oven compartment drying programme | • |
| Quick-release side racks | • |
| Removable stainless-steel side racks | • |
| Automatic descaling | • |
| CleanGlass door | • |
| **Steam techn./water supply** | |
| DualSteam | • |
| Steam generator power in kW | 3,30 |
| Fresh water container volume in l | 1,4 |
| Fresh water container behind motorised control panel | • |

DGC 7460 HCX Pro
Handleless combination steam oven
for steam cooking, baking, roasting with networking + HydroClean.

EAN: 4002516835387 / Material number: 12641100 /
Old Material Number: 23746099GB

| | |
|---|---|
| Condensate container behind motorised lift-up control panel with SoftClose | • |
| DirectWater | No |
| Drain filter | • |
| **Safety** | |
| Appliance cooling system and touch-cool front | • |
| Safety switch-off | • |
| System lock | • |
| Vapour cooling system | • |
| Sensor lock | • |
| **Technical data** | |
| Oven compartment volume in l | 67 |
| No. of shelf levels | 4 |
| Numbered shelf levels | • |
| Door hinge | Bottom |
| Oven light | BrilliantLight |
| Oven mode temperatures min. in °C | 30 |
| Oven mode temperatures max. in °C | 230 |
| Steam-cooking mode temperatures min. in °C | 40 |
| Steam-cooking mode temperatures max. in °C | 100 |
| Niche width min. in mm | 560 |
| Niche width max. in mm | 568 |
| Niche height min. in mm | 590 |
| Niche height max. in mm | 595 |
| Niche depth in mm | 550 |
| Appliance dimensions (W x H x D) in mm | 595 x 596 x 567 |
| Weight in kg | 46,4 |
| Total rated load in kW | 3,45 |
| Voltage in V | 230 |
| Frequency in Hz | 50 |
| Fuse rating in A | 16 |
| Number of phases | 1 |
| Mains cable with plug | • |
| Length of supply lead in m | 2 |
| Replacing lamps | Service |
| **Accessories included** | |
| Universal tray with PerfectClean HUBB 71 | 1 |
| Baking and roasting rack with PerfectClean HBBR 71 | 1 |
| Removable side runners (pair) | 1 |
| Perforated stainless-steel cooking containers | 1 |
| Solid stainless steel cooking containers | 1 |
| HydroClean cleaning agent | 1 |
| Descaling tablets | 2 |

DGC 7460 HCX Pro
Handleless combination steam oven
for steam cooking, baking, roasting with networking + HydroClean.




EAN: 4002516835387 / Material number: 12641100 /
Old Material Number: 23746099GB

| Available display languages | |
|---|---|
| Available display languages via MultiLingua | □□□□□□□□, □□, □□□□, deutsch, dansk, english, suomi, français, ελληνικά, italiano, □□□□, □□□□, hrvatski, bahasa malaysia, nederlands, norsk, polski, português, română, русский, svenska, srpski, slovenčina, slovenščina, español, čeština, türkçe, українська, magyar |

# DGC 7460 HCX Pro
## Handleless combination steam oven
## for steam cooking, baking, roasting with networking + HydroClean.

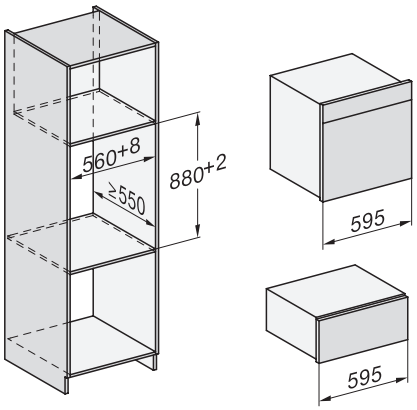


Installation DGC XXL, ESW7x20 installation drawings

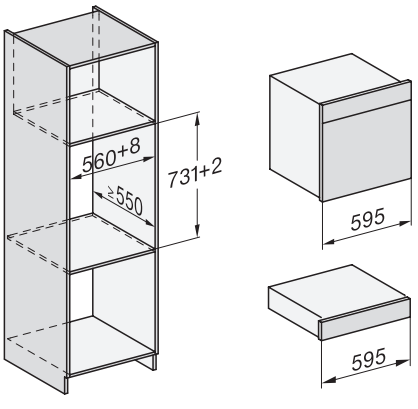


Installation_DGC_XXL_ESW7x10_EVS7010 installation drawings

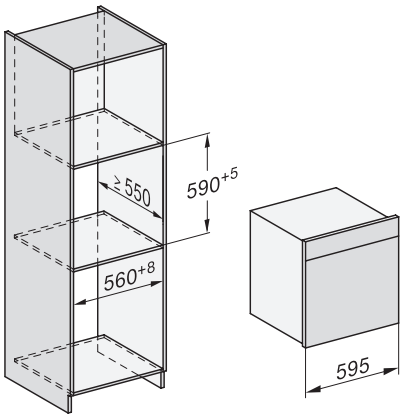


built-in DGC XXL, installation drawing

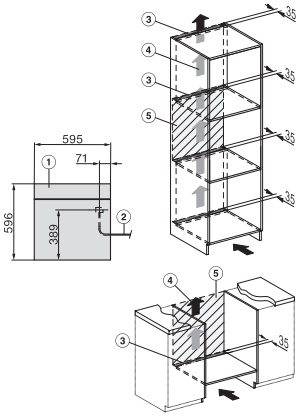


DGC7x60 connections and ventilation 60cm, installation drawing

1) Front view, 2) Mains connection cable, L=2.000 mm, 3) Ventilation cut min. 180 cm², 4) Ventilation and deaeration, 5) No connection in this area

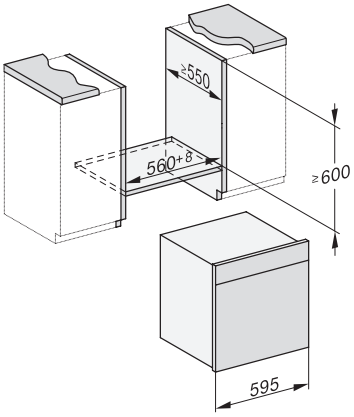


built-in DGC XXL build-under, installation drawing

Worktop overhang ≤ 29 mm

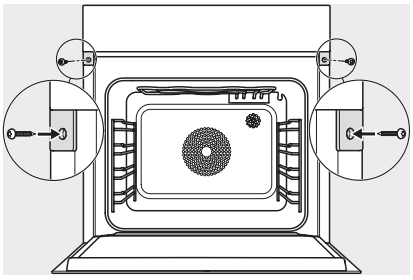

screw joint DGC XXL, installation drawing

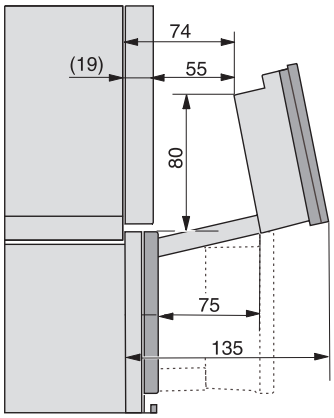


DGC7x4x swivel range of the aperture, installation drawings

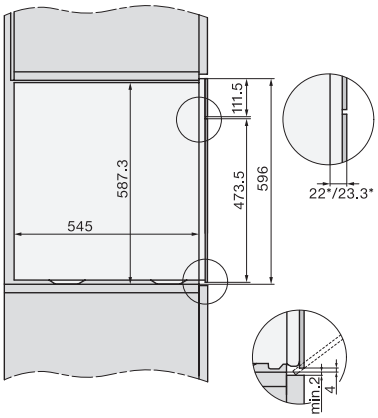


Seitenansicht DGC XXL, installation drawing, GB, AU

22 mm glass, 23,3 mm stainless steel