Miele

WWV980 WPS Passion
W1 front-loader washing machine:
A I 9 kg I 1600 rpm I M Touch I SteamCare I hot water



- Tested for 20 years of perfect laundry care*
- Save energy in the best energy efficiency class (A)
- M Touch – simple control by tapping or swiping
- SteamCare reduces ironing time by up to 50 % and freshens up your clothes
- Save up to 65 % on energy costs** with an additional hot water connection

* During the development phase of the W1 / W2 washing machine series, Miele tested models and core components in 5000 wash loads (= 5 wash loads per week for 50 weeks per year) in various programmes. More: miele.com/20years

** Compared with the sole use of cold water in a 9 kg test wash in the Cottons 60 °C programme, hot water temperature 55 °C, room temperature 23 °C, no cold water in hot water line.

EAN: 4002516072720 / Material number: 10994880 /
Old Material Number: 11WV9806GB

General information	
Model identifier	WWV980 WPS Passion
Manufacturer material number	10994880
EAN number	4002516072720
Marketing class	Diamond
Construction type	
Suitable for stacking	•
Door hinging	right
Side-by-side	•
Slot-in	•
Model	
Product brand	W1 White Edition
Front-loader	•
Spinning	
Max. spin speed	1600
Rinse hold	•
Without spin function	•
Design	
Appliance colour	Lotus white
Control panel colour	Lotus white
Door design	Alu silver with chrome ring
Control panel version	5° inclined
Control type	Touch control
Display	MTouch
Cleaning performance	
Innovative PowerWash technology	•
TwinDos automatic detergent dispensing	•
CapDosing portioned dispensing	•
Stains option	•
Certified virus hygiene	•
Gentle laundry care	
Honeycomb drum	•
Load in kg	9
User convenience	
Networking with Miele@home	•
SteamCare steam system	•
Delay start up to 24 hours	•
Time left display	•
Time of day display	•
Programme sequence indicator	•
Washing assistant	•
Information text	•
Favourite programmes	•
Drum lighting	LED
MultiLingua	•
AutoClean detergent drawer	•
Load indicator and dispensing recommendation	•
AddLoad	•

Miele

WWV980 WPS Passion
W1 front-loader washing machine:
A I 9 kg I 1600 rpm I M Touch I SteamCare I hot water



EAN: 4002516072720 / Material number: 10994880 /
Old Material Number: 11WV9806GB

Efficiency	
Energy efficiency class (A–G)	A
Weighted energy consumption per 100 operating cycles for the wash cycle in kWh	49
Weighted water consumption per cycle in l	48
Spin efficiency class (A–G)	A
Acoustic airborne noise emission class (spin cycle; A–D)	A
Sound emissions during spin cycle in dB(A) re 1 pW	67
Duration of the “ECO 40–60” programme at nominal capacity	199
Power rating in off mode in W	0,30
Power rating in networked standby in W	0,70
Hot water connection	•
EcoFeedback	•
Low temperature wash "Cold" and "20 °C"	•
Automatic load control	•
Flow meter	•
Foam sensing	•
ProfiEco motor	•
Wash programmes	
QuickPowerWash	•
Automatic plus	•
Cottons (coloureds)	•
Minimum iron	•
Delicates	•
Shirts	•
Silk (hand-washable)	•
Woollens (hand-washable)	•
Express 20	•
Dark garments	•
Denim	•
Outerwear	•
Proofing	•
Sportswear	•
Trainers	•
Down duvets	•
Pillows	•
Down	•
Curtains	•
Cottons hygiene	•
Steam care	•
Clean machine	•
Cottons arrow	•
First wash	•
Separate rinse	•
Starch	•
Drain / Spin	•
ECO 40-60	•

WWV980 WPS Passion
W1 front-loader washing machine:
A I 9 kg I 1600 rpm I M Touch I SteamCare I hot water

EAN: 4002516072720 / Material number: 10994880 /
Old Material Number: 11WV9806GB

Washing extras	
SingleWash	•
Short	•
Soak	•
Pre-wash	•
Water plus	•
Additional rinse cycle	•
Extra quiet	•
Pre-ironing with steam	•
Buzzer	•
AllergoWash	•
Safety	
Water protection system	Waterproof-System
Safety lock	•
PIN-Code	•
Optical interface	•
Technical data	
Dimensions (H x W x D) in mm	850 x 596 x 643
Dimensions in mm (width)	596
Dimensions in mm (height)	850
Dimensions in mm (depth)	643
Appliance depth in mm with opened door	1077
Weight in kg	98
Voltage in V	220-240
Fuse rating in A	13
Frequency in Hz	50
Total rated load in kW	2,10-2,40
Length of water inlet hose in m	1,60
Length of water drain hose in m	1,50
Length of supply lead in m	2
Length of supply lead in m	2,0
Length of supply lead in m	2
Replacing lamps	Service
Accessories included	
3 Caps	•
UltraPhase 1 + 2	•
Voucher for 5 Miele UltraPhase cartridges	•

WWV980 WPS Passion
W1 front-loader washing machine:
A I 9 kg I 1600 rpm I M Touch I SteamCare I hot water



EAN: 4002516072720 / Material number: 10994880 /
Old Material Number: 11WV9806GB

Available display languages	
Available display languages via MultiLingua	□□□□□□□□, □□, □□□□□, deutsch, dansk, english (AU), english (CA), english (GB), english (US), suomi, français (CA), français (FR), ελληνικά, italiano, □□□□, □□□□, hrvatski, bahasa malaysia, nederlands, norsk, polski, português, română, русский, svenska, srpski, slovenčina, slovenščina, español, čeština, türkçe, українська, magyar

WWV980 WPS Passion
W1 front-loader washing machine:
A I 9 kg I 1600 rpm I M Touch I SteamCare I hot water

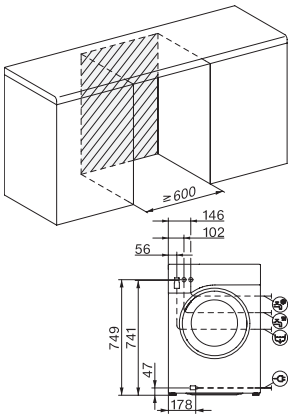

W1 drawing, facia 5 degree, measures in mm

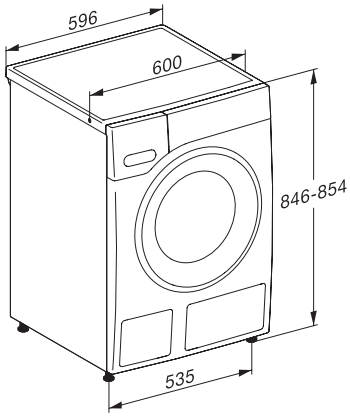

W1 drawing, facia 5 degree, measures in mm

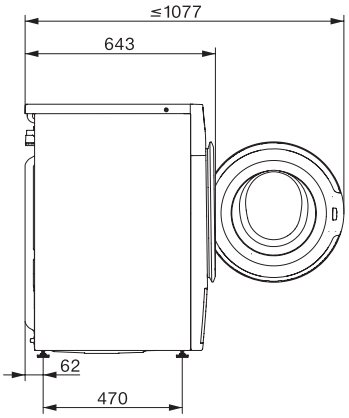

W1 drawing, facia 5 degree, measures in mm

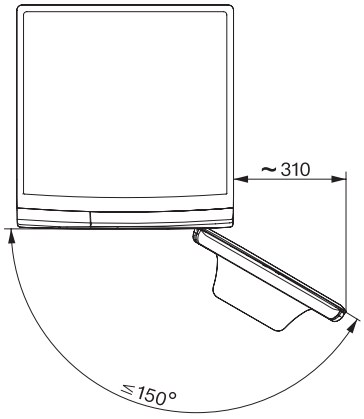

W1 drawing, facia 5 degree, measures in mm