DG 7440

Built-in steam oven

for healthy cooking with automatic programmes, networking and sous-vide cooking.



- Large clear text display with sensor controls – DirectSensor
- Perfect results – DualSteam technology
- Perfect results guaranteed every time – Automatic programmes
- Oven compartment lighting – 2 LED spotlights
- Network-enabled WiFi appliance – Miele@home

EAN: 4002516156666 / Material number: 11094430 /
Old Material Number: 23744040GB

General information	
Model identifier	DG 7440
Manufacturer material number	11094430
EAN number	4002516156666
Marketing class	Gold
Construction type and design	
PureLine	•
Construction type and design	
Built-in steam oven	•
Colour	Stainless steel/Clean Steel
Convenience features	
External steam generation	•
Menu cooking without transfer of taste	•
Automatic programmes with ability to make individual adjustments	•
Keeping warm	•
Operating modes	
Steam cooking	•
Sous-vide	•
Eco steam cooking	•
Defrosting	•
Reheat	•
Automatic programmes	•
Country-specific automatic programmes	•
Special applications	•
User convenience	
Networking with Miele@home	•
Display	DirectSensor
SoftOpen	•
SoftClose	•
MultiLingua	•
Quantity-independent cooking	•
Steam cooking on up to 3 levels at the same time	•
Automatic menu cooking	•
Steam reduction before end of programme	•
Time of day display	•
Date display	•
Minute minder	•
Programmable start of cooking duration	•
Programmable end of cooking duration	•
Programmable cooking duration	•
Actual temperature display	•
Target temperature display	•
Buzzer when desired temperature is reached	•
Recommended temperature	•
User programmes	•
Individual settings	•

DG 7440
Built-in steam oven
for healthy cooking with automatic programmes, networking and sous-vide cooking.



EAN: 4002516156666 / Material number: 11094430 /
Old Material Number: 23744040GB

Efficiency	
Power rating in off mode in W	0,3
Power rating in standby mode in W	0,8
Power rating in networked standby in W	2,0
Time until automatic switch to standby in min	20
Time until automatic switch to networked standby in min	20
Time until automatic switch to off mode in min	20
Cleaning and care	
Stainless steel/CleanSteel finish	•
Stainless-steel oven compartment with linen structure	•
External steam generator	•
Floor heater for condensate reduction	•
Quick-release side racks	•
Removable stainless-steel side racks	•
Descaling	•
CleanGlass door	•
Steam techn./water supply	
DualSteam	•
Fresh water container volume in l	1,5
Removal of fresh water container with Push2release	•
DirectWater	No
Safety	
Appliance cooling system and touch-cool front	•
Safety switch-off	•
System lock	•
Vapour cooling system	•
Sensor lock	•
Technical data	
Oven compartment volume in l	40
No. of shelf levels	4
Door hinge	Bottom
Oven light	2 LED spots
Steam-cooking mode temperatures min. in °C	40
Steam-cooking mode temperatures max. in °C	100
Niche width min. in mm	560
Niche width max. in mm	568
Niche height min. in mm	450
Niche height max. in mm	452
Niche depth in mm	550
Appliance dimensions (W x H x D) in mm	595 x 455 x 569
Weight in kg	26,4
Total rated load in kW	3,60
Voltage in V	230
Frequency in Hz	50-60
Fuse rating in A	16
Number of phases	1
Mains cable with plug	•
Length of supply lead in m	2

DG 7440
Built-in steam oven
for healthy cooking with automatic programmes, networking and sous-vide cooking.



EAN: 4002516156666 / Material number: 11094430 /
Old Material Number: 23744040GB

Replacing lamps	Service
Accessories included	
Removable side runners (pair)	1
No. of perforated stainless-steel cooking container	2
Solid stainless steel cooking containers DGG 50 40	1
Wire rack	1
Drip tray DGG 100 40	1
Descaling tablets	2
Available display languages	
Available display languages via MultiLingua	□□□□□□□□, □□, □□□□, deutsch, dansk, english, suomi, français, ελληνικά, italiano, □□□, □□□, hrvatski, bahasa malaysia, nederlands, norsk, polski, português, română, русский, svenska, srpski, slovenčina, slovenščina, español, čeština, türkçe, українська, magyar

DG 7440

Built-in steam oven

for healthy cooking with automatic programmes, networking and sous-vide cooking.

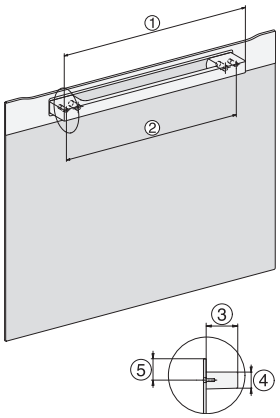

H7000 handle, installation drawing

1) 400 mm, 2) 360 mm, 3) 47 mm, 4) 24 mm, 5) 32.5 mm

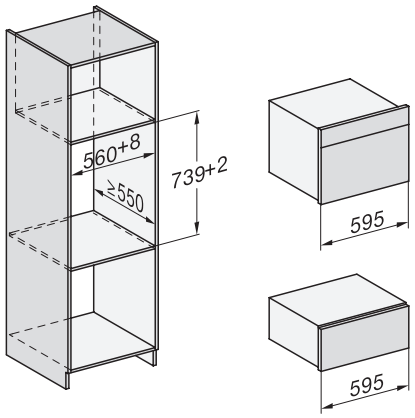

Installation DG, DGM, DGC XL, ESW7x20 installation drawings

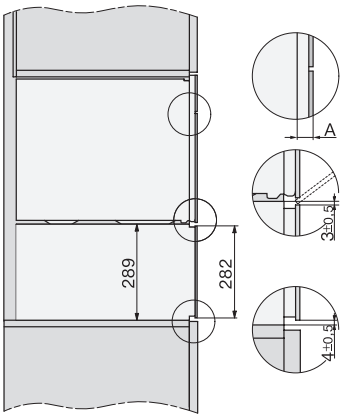

side view, DG, DGM, ESW7x20 installation drawings

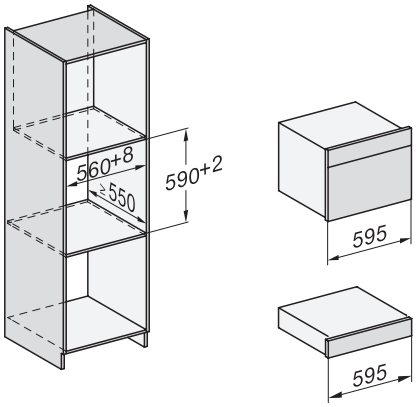

Installation_DG_DGM_DGC_XL_ESW7x10_EVS7010, installation drawings

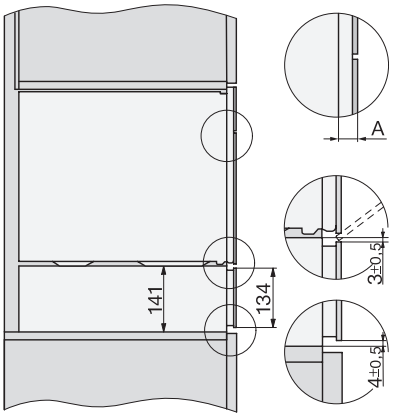

Side view_DG_DGM_ESW7x10_EVS7010 installation drawings

A) 22 mm glass, 23,3 mm stainless steel

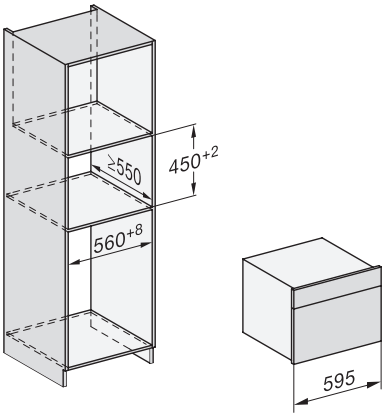

DG7xxx, DGM7xxx, installation drawings

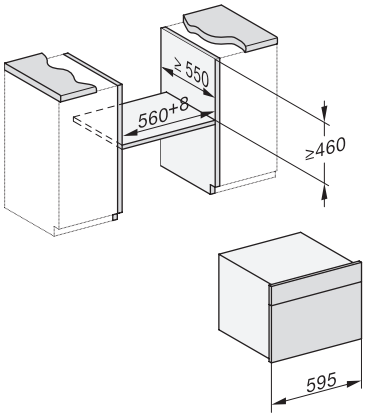

built-in DG DGM DGC XL build-under, installation drawing

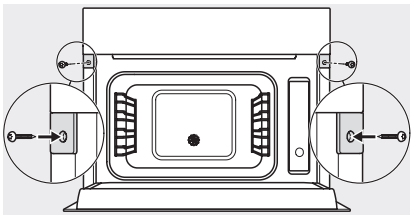

Screw joint DG DGM, installation drawing

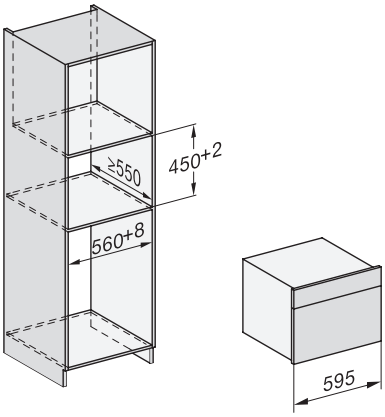

DG DGM, installation drawing

DG 7440

Built-in steam oven

for healthy cooking with automatic programmes, networking and sous-vide cooking.

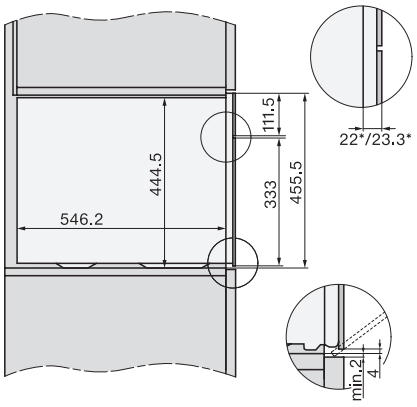

side view DG DGM, installation drawing, GB, AU

22 mm glass, 23,3 mm stainless steel

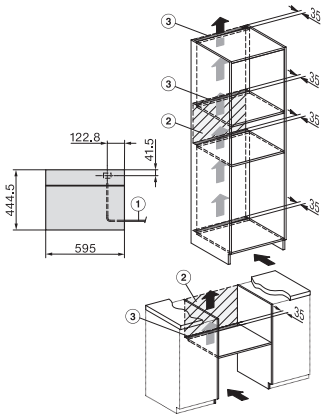

installation DG, installation drawing, GB, AU

1) Mains connection cable, L=2000 mm, 2) No connection in this area, 3) Ventilation cutout min. 180 cm²