WWJ880 WCS PWash&TDos&Steam
W1 front-loader washing machine:
A -20 %* I 9 kg I 1600 rpm I Auto. dispensing I QuickPowerWash I Virus hygiene



- Tested for 20 years of perfect laundry care*
- Save even more energy with A -20 %**
- Precise and automatic detergent dispensing with TwinDos®***
- QuickPowerWash ensures fast, efficient results in just 49 minutes****
- Virus hygiene eliminates 99.9 %*****of potential viruses from your laundry

* During the development phase of the W1 / W2 washing machine series, Miele tested models and core components in 5000 wash loads (= 5 wash loads per week for 50 weeks per year) in various programmes. More: miele.com/20years

** 20 % more economical than the threshold value (52) for energy efficiency class A.

*** Patent EP 2 784 205

**** This applies to all Miele washing machines that enable the process and machine-related parameters presented in the summary of the WL 1110/18 test report to be implemented.

***** Tested by Albstadt-Sigmaringen University and awarded the gold label by the Institute for Integrative Hygiene and Virology (InFluenc_H). Applies to all models with TwinDos® and PowerWash in the Cottons hygiene 60 °C programme with the Hygiene plus Extra. A description of the relevant methodology can be found at the following link: https://www.miele.com/wa-c

EAN: 4002516881834 / Material number: 12774950 /
Old Material Number: 11WJ8805GB

General information	
Model identifier	WWJ880 WCS PWash&TDos&Steam
Manufacturer material number	12774950
EAN number	4002516881834
Marketing class	Platinum
Construction type	
Suitable for stacking	•
Door hinging	right
Side-by-side	•
Slot-in	•
Model	
Product brand	W1 White Edition
Front-loader	•
Spinning	
Max. spin speed	1600
Rinse hold	•
Without spin function	•
Design	
Appliance colour	Lotus white
Control panel colour	Lotus white
Door design	Obsidian black with chrome ring
Rotary selector colour	Lotus White / Chrome ring
Control panel version	5° inclined
Control type	Rotary control
Display	ComfortSensor white, 1 line
Cleaning performance	
Innovative PowerWash technology	•
TwinDos automatic detergent dispensing	•
CapDosing portioned dispensing	•
Stains option	•
Certified virus hygiene	•
Gentle laundry care	
Honeycomb drum	•
Load in kg	9
User convenience	
Networking with Miele@home	•
SteamCare steam system	•
Delay start up to 24 hours	•
Time left display	•
Programme sequence indicator	•
Drum lighting	LED
MultiLingua	•
AutoClean detergent drawer	•
AddLoad	•
Efficiency	
Energy efficiency class (A–G)	A

WWJ880 WCS PWash&TDos&Steam
W1 front-loader washing machine:
A -20 %* I 9 kg I 1600 rpm I Auto. dispensing I QuickPowerWash I Virus hygiene



EAN: 4002516881834 / Material number: 12774950 /
Old Material Number: 11WJ8805GB

More economical than the threshold value (52) for energy efficiency class A	20%
Weighted energy consumption per 100 operating cycles for the wash cycle in kWh	40
Weighted water consumption per cycle in l	50
Spin efficiency class (A–G)	A
Acoustic airborne noise emission class (spin cycle; A–D)	A
Sound emissions during spin cycle in dB(A) re 1 pW	68
Duration of the “ECO 40–60” programme at nominal capacity	229
Power rating in off mode in W	0,40
Power rating in networked standby in W	0,80
EcoFeedback	•
Low temperature wash "Cold" and "20 °C"	•
Automatic load control	•
Flow meter	•
Foam sensing	•
ProfiEco motor	•
Wash programmes	
QuickPowerWash	•
Automatic plus	•
Cottons (coloureds)	•
Minimum iron	•
Delicates	•
Shirts	•
Silk (hand-washable)	•
Woollens (hand-washable)	•
Express 20	•
Dark garments / Denim	•
Outerwear	•
Proofing	•
Sportswear	•
Down duvets	•
Pillows	•
Down	•
Curtains	•
Cottons hygiene	•
Steam care	•
Clean machine	•
First wash	•
Separate rinse/Starch	•
Drain / Spin	•
ECO 40-60	•
Washing extras	
SingleWash	•
Short	•
Soak	•
Pre-wash	•
Water plus	•

WWJ880 WCS PWash&TDos&Steam
W1 front-loader washing machine:
A -20 %* I 9 kg I 1600 rpm I Auto. dispensing I QuickPowerWash I Virus hygiene



EAN: 4002516881834 / Material number: 12774950 /
Old Material Number: 11WJ8805GB

Additional rinse cycle	•
Pre-ironing with steam	•
Buzzer	•
AllergoWash	•
Safety	
Water protection system	Watercontrol-System
Safety lock	•
PIN-Code	•
Optical interface	•
Technical data	
Dimensions (H x W x D) in mm	850 x 596 x 643
Dimensions in mm (width)	596
Dimensions in mm (height)	850
Dimensions in mm (depth)	643
Appliance depth in mm with opened door	1077
Weight in kg	94
Voltage in V	220-240
Fuse rating in A	13
Frequency in Hz	50
Total rated load in kW	2,10-2,40
Length of water inlet hose in m	1,60
Length of water drain hose in m	1,50
Length of supply lead in m	2
Accessories included	
3 Caps	•
UltraPhase 1 + 2	•
Voucher for 5 Miele UltraPhase cartridges	•
Available display languages	
Available display languages via MultiLingua	deutsch, dansk, english (GB), suomi, norsk, português, русский, svenska, slovenčina, español, čeština, українська

WWJ880 WCS PWash&TDos&Steam
W1 front-loader washing machine:
A -20 %* I 9 kg I 1600 rpm I Auto. dispensing I QuickPowerWash I Virus hygiene

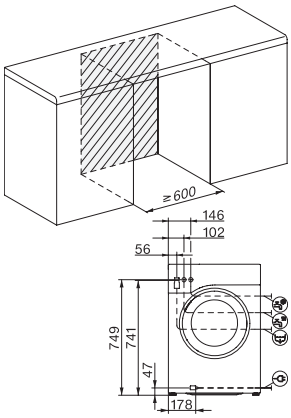

W1 drawing, facia 5 degree, measures in mm

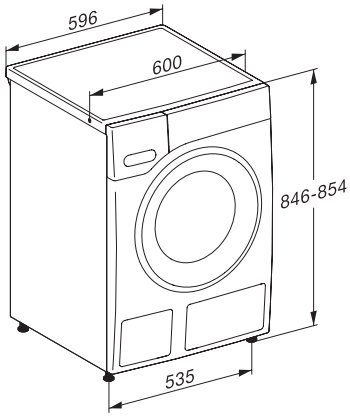

W1 drawing, facia 5 degree, measures in mm

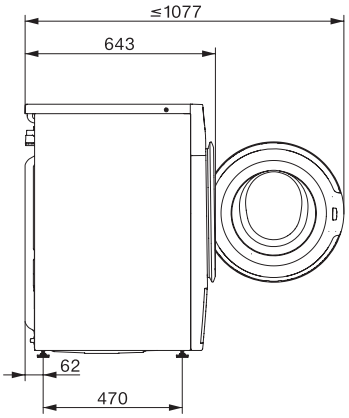

W1 drawing, facia 5 degree, measures in mm

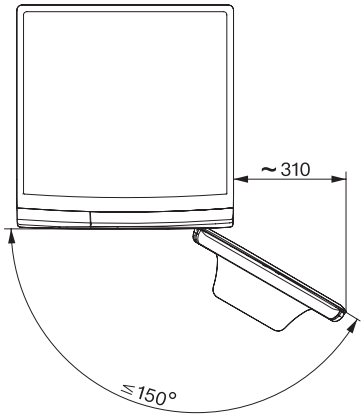

W1 drawing, facia 5 degree, measures in mm