KM 6520 FR

Electric hob with onset controls
with 4 cooking zones for maximum convenience at an attractive entry level price.

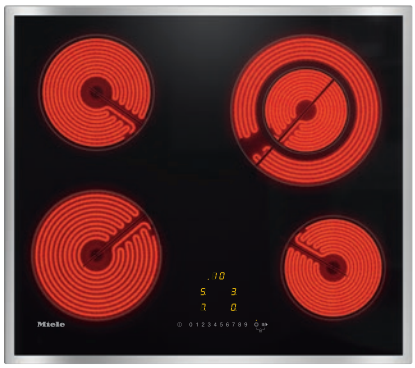

- Easy operation – EasySelect
- Attractive design – 574 mm wide with all-round frame
- Particularly versatile – 4 cooking zones incl. 1 Vario zone
- Convenient – Auto heat-up for every cooking zone
- Safe – three level residual heat indicator for every cooking zone

EAN: 4002515995068 / Material number: 10889620 /
Old Material Number: 26652010GB

General information	
Model identifier	KM 6520 FR
Manufacturer material number	10889620
EAN number	4002515995068
Marketing class	Silver
Heating type	
Heating type	Electric
Construction type	
Independent of cooker	•
Design	
Elegant glass ceramic surface	•
Ceramic surface colour	Black
Stainless-steel frame	•
Surface-mounted installation	•
Cooking zone details	
Number of cooking zones	4
1st cooking zone/cooking area	
Position	front left
Type	Single-circuit ring
Size in mm	Ø 180
Max. rating in W	1800
2nd cooking zone/cooking area	
Position	rear left
Type	Single-circuit ring
Size in mm	Ø 160
Max. rating in W	1500
3rd cooking zone/cooking area	
Position	rear right
Type	Dual-circuit ring
Size in mm	Ø 120 / Ø 210
Max. rating in W	750/2200
4th cooking zone/cooking area	
Position	front right
Type	Single-circuit ring
Size in mm	Ø 145
Max. rating in W	1200
User convenience	
Display colour	Yellow
Stop & Go function	•
Recall function	•
Minute minder	•
Safety switch-off	•
Auto heat-up	•
Individual setting options (e.g. buzzers)	•
Efficiency	
Residual heat utilisation	•
Power rating in off mode in W	0,5
Power rating in standby mode in W	0,8

KM 6520 FR

Electric hob with onset controls
with 4 cooking zones for maximum convenience at an attractive entry level price.

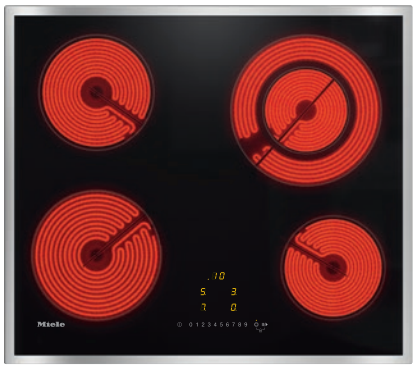

EAN: 4002515995068 / Material number: 10889620 /
Old Material Number: 26652010GB

Power rating in networked standby in W	2,0
Time until automatic switch to off mode in min	10
Time until automatic switch to standby in min	10
Time until automatic switch to networked standby in min	10
Cleaning and care	
Easy to clean ceramic glass	•
Safety	
Safety switch-off	•
Lock function	•
System lock	•
Overheating protection	•
Residual heat indicator	•
Technical data	
Dimensions (H x W x D) in mm	43 x 574 x 504
Dimensions in mm (width)	574
Dimensions in mm (height)	43
Dimensions in mm (depth)	504
Casing height incl. connection box in mm	43
Cutout dimensions in mm (width) with surface-mounted installation	560 mm
Cutout dimensions in mm (depth) with surface-mounted installation	490 mm
Weight in kg	8
Total rated load in kW	6,70
Length of supply lead in m	1,4
Voltage in V	230
Frequency in Hz	50-60
Accessories included	
Razor-blade scraper	•
Mains cable	Yes

KM 6520 FR

Electric hob with onset controls
with 4 cooking zones for maximum convenience at an attractive entry level price.

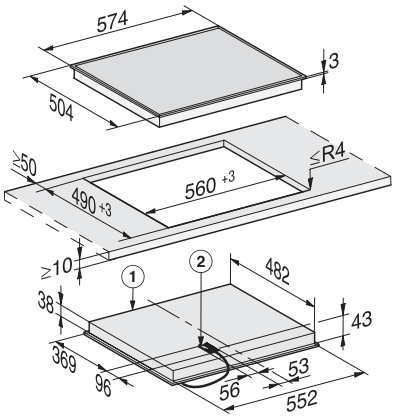

KM 6520 FR, KM 6538 FR (Installation drawign)

1) Front, 2) Mains Connection box. Built-in height 43 mm,
mains connection cable L = 1440 mm