KS 4783 ED
Freestanding refrigerator
with DailyFresh and extra convenience for the perfect side-by-side combination.



- Spacious drawer with moisture control – DailyFresh
- Uniform temperature distribution inside the appliance – DynaCool
- Soft closing of the door with SoftClose
- Flexible refrigerator adaptation for tall containers – FlexiBoard
- Dishwasher-safe door shelves – ComfortClean

EAN: 4002516515777 / Material number: 11949580 /
Old Material Number: 36478350AUS

General information	
Model identifier	KS 4783 ED
Manufacturer material number	11949580
EAN number	4002516515777
Marketing class	Gold
Appliance category	
Refrigerator	•
Construction type	
Freestanding appliance	•
Door hinge	right
Convertible door hinging	•
Side-by-side enabled	•
Design	
Casing colour	Silver
Front colour	Stainless steel/CleanSteel
User convenience	
Fridge zone lighting	LED
Networking with Miele@home	•
Freshness system	DailyFresh
Door opening aid	EasyOpen lever handle
ComfortClean	•
ComfortSize	•
DynaCool	•
Party mode	•
Holiday mode	•
SoftClose	•
Control system	
Operating concept	SensorTouch
Precise adjustment	Fridge temperature
SuperCool	•
No. of temperature zones	1
Sabbath mode	•
Fridge/Fridge section	
No. of shelves	6
including number of split shelves (FlexiBoard)	1
Chrome-plated metal bottle rack	•
No. of crisper drawers	2
Number of inner door racks for tinned food	3
Door rack for bottles	2
Door shelves	5
Safety	
Lock function	•
Acoustic door alarm	•
Acoustic temperature alarm	•
Optical door alarm	•
Technical data	
Appliance width in mm	597
Appliance height in mm	1855

KS 4783 ED
Freestanding refrigerator
with DailyFresh and extra convenience for the perfect side-by-side combination.



EAN: 4002516515777 / Material number: 11949580 /
Old Material Number: 36478350AUS

Appliance depth in mm	675
Weight in kg	71,3
Climate range	SN-T
Refrigerator compartment in l	399
Total usable capacity in l	399
Current consumption (mA)	1200
Voltage in V	220-240
Fuse rating in A	10
Number of phases	1
Frequency in Hz	50-60
Length of supply lead in m	2,0
Replacing lamps	Service
Accessories included	
Egg tray	•
Water filter	Nein

KS 4783 ED

Freestanding refrigerator

with DailyFresh and extra convenience for the perfect side-by-side combination.

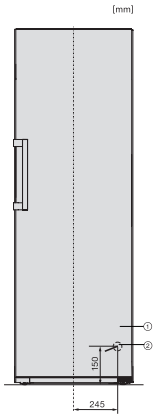

KS4383ED N, KS4383DD N, Nordic, KS4783DD, KS4783ED, K4776ED, installation

1. View from the front, 2. Mains connection cable, L = 2000 mm

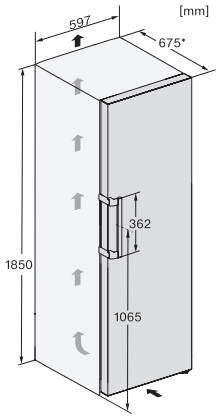

K4776ED, KS4783ED, FN4772E, installation sketch

*To achieve the declared energy consumption, the spacers supplied with the unit must be used. This increases the depth of the unit by approx. 15 mm. The unit is fully functional without the use of the spacers, but has a slightly higher energy consumption.

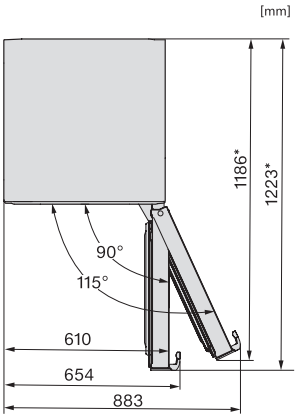

KFN4777CD, KFN4797DD, KFN4797CD, KFN4799DDE, KFN4795DD, KFN4795CD, KFN4795BD, top view

*To achieve the declared energy consumption, the spacers supplied with the unit must be used. This increases the depth of the unit by approx. 15 mm. The unit is fully functional without the use of the spacers, but has a slightly higher energy consumption.

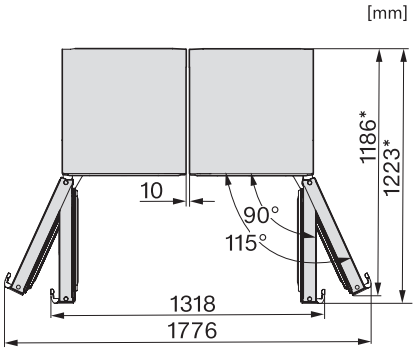

KS4783DD, KS4783ED, FNS4782E, FNS4782D, top view, Side-by-Side

*To achieve the declared energy consumption, the spacers supplied with the unit must be used. This increases the depth of the unit by approx. 15 mm. The unit is fully functional without the use of the spacers, but has a slightly higher energy consumption.

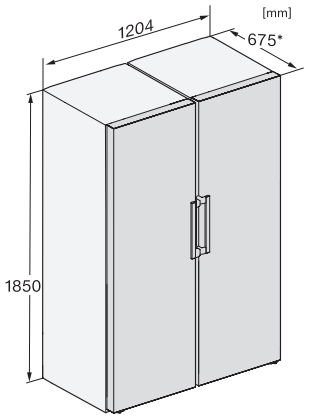

KS4783DD, KS4383ED, FNS4782E, FNS4782D, installation sketch, Side-by-Side

*To achieve the declared energy consumption, the spacers supplied with the unit must be used. This increases the depth of the unit by approx. 15 mm. The unit is fully functional without the use of the spacers, but has a slightly higher energy consumption.

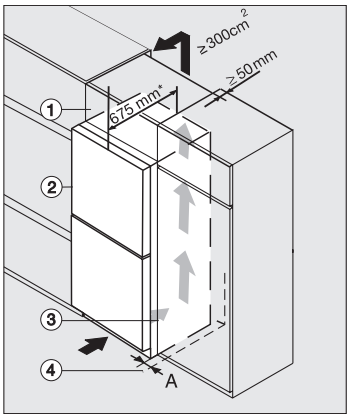

Integrating freestanding refrigeration appliance in a run of kitchen units, edt/cs, ws, bst, el

1. Top box, 2. Refrigeration appliance, door depth = 75 mm , 3. Housing unit, 4. Wall, A = 25 mm (with recessed grip)/60 mm (with handle), The appliance depth is increased by approx. 15 mm for refrigeration appliances with wall spacers fitted.