G 5110 SC Active
Freestanding dishwashers
45 dB I Cutlery tray I Comfort baskets I QuickPowerWash I Delay start



- Tested for the equivalent of 20 years' service life*
- Flexible basket design perfect for everyday use – Comfort baskets
- Perfect results in less than one hour – QuickPowerWash
- Thanks to delay start, you can set a start time for the wash cycle up to 24 hours in advance
- Very easy door opening and closing – ComfortClose

* During the development phase of the G 5000 and G 7000 dishwasher series, Miele tested models and core components in 5600 wash cycles (= 280 wash cycles per year over a period of 20 years) in various programmes. More at: miele.com/20years

EAN: 4002516610106 / Material number: 12153210 / Old Material Number: 21511016GB

General information	
Model identifier	G 5110 SC Active
Manufacturer material number	12153210
EAN number	4002516610106
Marketing class	Silver
Model	
Freestanding dishwasher	•
60 cm dishwasher	•
Design	
Control panel colour	Brilliant White
Control panel version	Straight fascia
Control type	Programme selector button
Display	3-digit 7-segment display
Display colour	Yellow
Convenience	
Door closing aid	ComfortClose
Time left display	•
Delay start up to 24 hours	•
In-operation indicator	Display
Efficiency	
Energy efficiency class (A–G)	D
Water consumption in the Automatic programme in l from	6,0
Water consumption of the ECO programme in litres per programme cycle	8,5
Electricity consumption in the ECO programme in kWh	0,84
Energy consumption of the ECO programme in kWh after 100 programme cycles	84
Consumption value in kWh in the ECO programme with hot water connection	0,57
Duration of ECO programme in minutes	265
Power rating with delay start in W	1,00
Power rating in off mode in W	0,30
Power rating in standby mode in W	0,30
Number of place settings	14
Noise emission class	C
Noise emissions in dB(A)	45
EcoPower Technology	•
Proven hygiene	•
Hot water connection	•
Half load	•
Quality of results	
Fresh water dishwasher	•
BrilliantGlassCare	•
Wash programmes	
QuickPowerWash	•
ECO	•
Automatic	•
Intensive 75 °C	•
Gentle	•

G 5110 SC Active
Freestanding dishwashers
45 dB I Cutlery tray I Comfort baskets I QuickPowerWash I Delay start



EAN: 4002516610106 / Material number: 12153210 / Old Material Number: 21511016GB

Dishwashing options	
Express	•
Extra Clean	•
Extra dry	•
Basket design	
Cutlery loading	Cutlery tray
FlexCare cup rack	1
Basket design	Comfort
Safety	
Waterproof system	•
Safety lock	•
Technical data	
Niche width minimal in mm	600
Niche width max in mm	600
Niche height minimal in mm	845
Niche height maximal in mm	880
Niche depth in mm	600
Appliance width in mm	598
Appliance height in mm	845
Appliance depth in mm	600
Depth with door open in cm	119,5
Net weight in kg	53,5
Total rated load in kW	2,00
Voltage in V	230
Fuse rating in A	10
Number of phases	1
Electrical frequency standard	50
Length of water inlet hose in m	1,50
Length of water drain hose in m	1,50
Length of supply lead in m	1,80
Accessories included	
Voucher for 1 x box of UltraTabs (20 tabs) or 3 boxes (60 tabs in each) at a reduced price	•

G 5110 SC Active
Freestanding dishwashers
45 dB I Cutlery tray I Comfort baskets I QuickPowerWash I Delay start

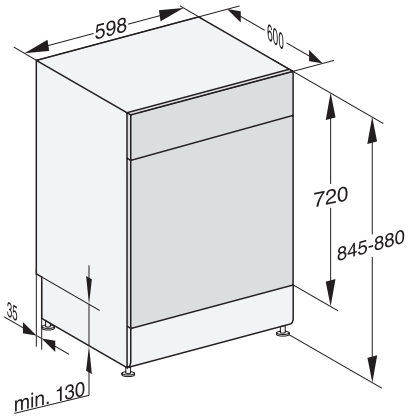

G7000, free standing dishwasher, 60cm (installation drawing)