Miele

ESW 7010

14 cm high gourmet warming drawer without handle
for preheating crockery, keeping food warm and low temperature cooking.



- The ultimate in enjoyment – low temperature cooking
- Always at the right temperature – 4 functions
- Convenient and easy – Touch control
- Opening the drawer couldn't be easier – Push2open
- Better safe than sorry – timer function with automatic switch-off

EAN: 4002516835264 / Material number: 12641320 /
Old Material Number: 30701060GB

General information	
Model identifier	ESW 7010
Manufacturer material number	12641320
EAN number	4002516835264
Construction type and design	
VitroLine	•
ArtLine	•
Handleless	•
Construction type and design	
Gourmet warming drawer	•
Colour	Pearl beige
Operating modes	
Cup warming	•
Plate warming	•
Convenience features	
Pre-heating crockery	•
Keeping food warm	•
Perfect cooking results at low temperature	•
Operating modes	
Keeping food warm	•
Low temperature cooking	•
User convenience	
Miele@home	•
Control panel with sensor controls	•
Fully telescopic runners for easy loading and unloading of the warming drawer	•
Control panel with symbols	•
Push2open mechanism	•
Stop programming	•
Timer function	•
Sabbath programme	•
Cleaning and care	
Flush control panel	•
Safety	
Cool front	•
Anti-slip mat	•
Safety switch-off	•
Accessory drawer	
Capacity	6 place settings
Technical data	
Temperatures min. in °C	40
Temperatures max. in °C	85
Appliance width in mm	595
Appliance height in mm	141
Appliance depth in mm	570
Useable interior height in mm	80
Total rated load in kW	0,70
Voltage in V	230

ESW 7010

14 cm high gourmet warming drawer without handle
for preheating crockery, keeping food warm and low temperature cooking.



EAN: 4002516835264 / Material number: 12641320 /
Old Material Number: 30701060GB

Frequency in Hz	50-60
Fuse rating in A	10
Number of phases	1
Mains cable with plug	•
Length of supply lead in m	2,0
Accessories included	
Anti-slip mat	1

ESW 7010

14 cm high gourmet warming drawer without handle
for preheating crockery, keeping food warm and low temperature cooking.

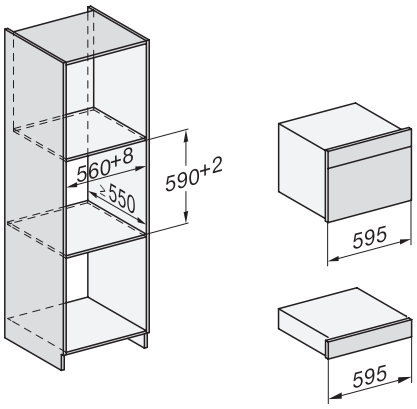

Installation_DG_DGM_DGC_XL_ESW7x10_EVS7010, installation drawings

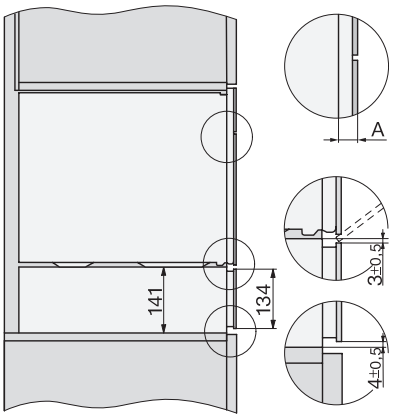

Side view_DG_DGM_ESW7x10_EVS7010 installation drawings

A) 22 mm glass, 23,3 mm stainless steel

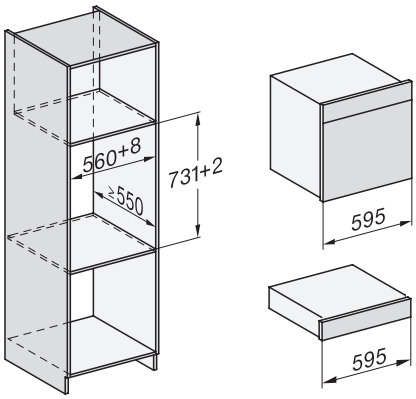

Installation_DGC_XXL_ESW7x10_EVS7010 installation drawings

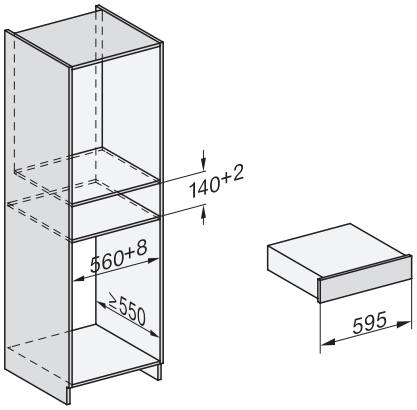

built-in ESW7x10 EVS7010, installation drawing

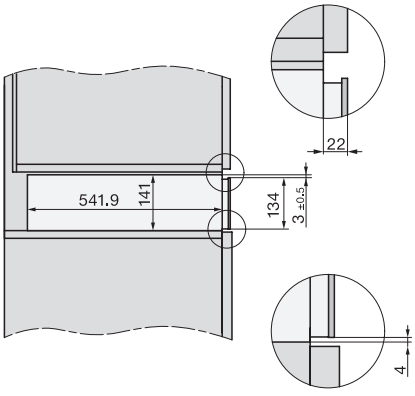

side view ESW7x10 EVS7010, installation drawing, GB, AU

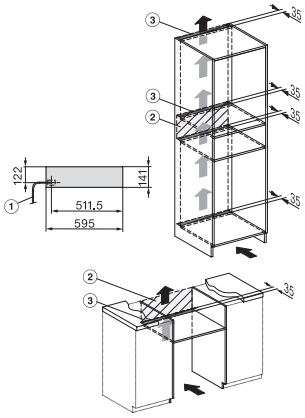

ESW7010, ESW7110 - installation drawing – Installation – GB, AU

1) Front view, 2) Mains connection cable, L=2,000 mm, 3) ventilation cut-out min. 180 cm², 4) no connection in this area