TWA520WP 8kg Active
T1 heat-pump dryer:
8 kg I EasyControl I EcoSpeed I EcoDry technology I FragranceDos



- Tested for 20 years of perfect laundry care*
- Heat pump technology – low consumption, gentle drying
- EcoSpeed efficiently reduces the drying time by 20 minutes**
- EcoDry for efficient performance over the entire tumble dryer service life***
- FragranceDos ensures your laundry smells wonderfully fresh after drying****

* During the development phase of the W1 / W2 washing machine series, Miele tested models and core components in 5000 wash loads (= 5 wash loads per week for 50 weeks per year) in various programmes. More: miele.com/20years

** Time savings calculated compared to Miele tumble dryers without EcoSpeed with the same load size and similar energy efficiency. Tested in the "Cottons" programme with a full load size.

*** Filter system patent EP 2 455 537

**** Patent EP 2 431 516

EAN: 4002516867593 / Material number: 12719110 /
Old Material Number: 12WA5202GB

General information	
Model identifier	TWA520WP 8kg Active
Manufacturer material number	12719110
EAN number	4002516867593
Marketing class	Silver
Construction type	
Suitable for stacking	•
Door hinging	left, Reversible
Side-by-side	•
Slot-in	•
Model	
Product brand	T1 White Edition
Heat pump dryer	•
Design	
Appliance colour	Lotus white
Control panel colour	Lotus white
Door design	White
Rotary selector colour	Lotus White
Control panel version	5° inclined
Control type	Rotary control
Display	EasyControl yellow
Drying results	
PerfectDry precision drying	•
FragranceDos fragrance system	•
Intelligent drum reversal	•
Gentle laundry care	
Honeycomb drum	•
Load in kg	8
User convenience	
Delay start up to 24 hours	•
Time left display	•
Programme sequence indicator	No
Drum lighting	LED
Condensate container	•
Integrated condensed water drainage	•
AddLoad	•
Efficiency	
EcoDry technology	•
Maintenance-free heat exchanger	•
ProfiEco motor	•
EcoSpeed	•
Drying programmes	
Cottons (coloureds)	•
Cottons arrow	•
Minimum iron	•
Delicates	•
Shirts	•
Woollens handcare	•

TWA520WP 8kg Active
T1 heat-pump dryer:
8 kg I EasyControl I EcoSpeed I EcoDry technology I FragranceDos



EAN: 4002516867593 / Material number: 12719110 /
Old Material Number: 12WA5202GB

Express	•
Denim	•
Proofing	•
Pre-Ironing	•
Bed linen	•
Warm air/DryFresh	•
Drying extras	
Anti-crease	•
Gentle tumble	•
Buzzer	•
Quality	
Soft ribs	•
Safety	
PIN-Code	•
Empty out container indicator	•
Clean filter indication	•
Optical interface	•
Technical data	
Dimensions (H x W x D) in mm	850 x 596 x 655
Dimensions in mm (width)	596
Dimensions in mm (height)	850
Dimensions in mm (depth)	655
Weight in kg	52
Voltage in V	220-240
Fuse rating in A	13
Frequency in Hz	50
Total rated load in kW	1,10
Length of supply lead in m	2,0
Hermetically sealed	•
Type of coolant	R290
Refrigerant quantity in kg	0,14
Refrigerant global warming potential in CO_2 e	3
Appliance global warming potential in CO_2 e	0,42
Replacing lamps	Service
Accessories included	
Fragrance flacon	•
Voucher for a second fragrance flacon	•

TWA520WP 8kg Active
T1 heat-pump dryer:
8 kg I EasyControl I EcoSpeed I EcoDry technology I FragranceDos

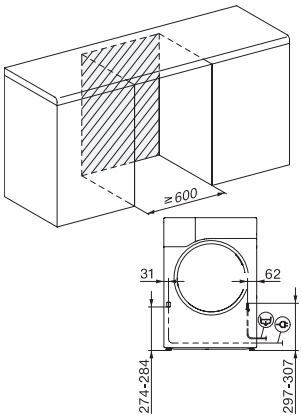

T1 installation drawing, facia 5 degree, measures in mm

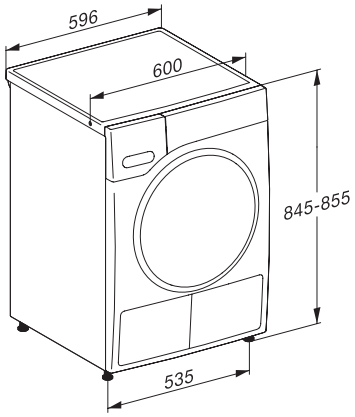

T1 drawing, facia 5 degree, measures in mm

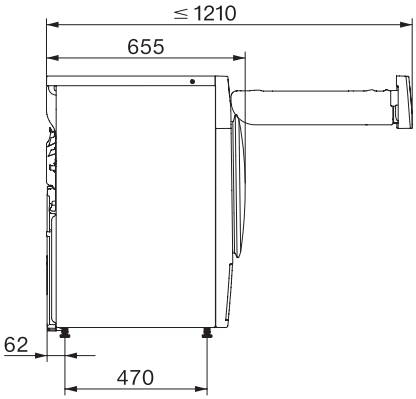

T1 drawing, facia 5 degree, without porthole, measures in mm

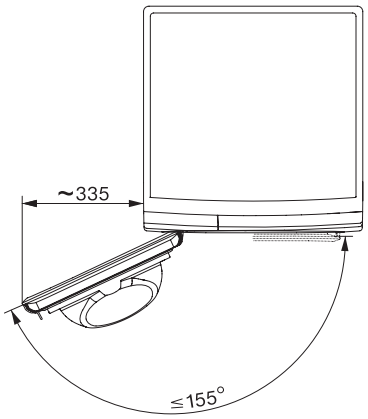

T1 drawing, facia 5 degree, measures in mm