F 2413 Vi
MasterCool freezer
For high-end design and technology on a large scale.



- Push2open for convenient door-opening assistance
- Light floods the interior thanks to LED elements – BrilliantLight
- Fresh ice cubes from the IceMaker with mains water connection
- Convenient control thanks to colour touch display MasterSensor

EAN: 4002516550105 / Material number: 12021690 /
Old Material Number: 37241301EU1

General information	
Model identifier	F 2413 Vi
Manufacturer material number	12021690
EAN number	4002516550105
Marketing class	Diamond
Appliance category	
Freezer	•
Construction type	
Built-in appliance	•
Integrated appliance	•
Door hinge	Left
Convertible door hinging	•
Side-by-side enabled	•
Design	
Lighting	BrilliantLight
User convenience	
Networking with Miele@home	•
Operating concept	MasterSensor
Sabbath mode	•
NoFrost	•
SoftClose	•
IceMaker with mains water connection	•
Push2open	•
FullAccess	•
EasyClean	•
MaxLoad hinge	•
Control system	
SuperFreeze	•
No. of temperature zones	1
Eco mode	•
Freezer/Freezer section	
No. of shelves/surfaces	2
Number of freezer baskets	2
Door baskets – small	1
Door baskets – large	3
Efficiency	
Energy efficiency class (A–G)	E
Annual energy consumption in kWh	246,00
Energy consumption in 24 h in kWh	0,81
Safety	
Lock function	•
Acoustic door alarm	•
Acoustic temperature alarm	•
Optical door alarm	•
Optical temperature alarm	•
Technical data	
Niche width in mm min.	457
Niche width in mm max.	460

F 2413 Vi
MasterCool freezer
For high-end design and technology on a large scale.



EAN: 4002516550105 / Material number: 12021690 /
Old Material Number: 37241301EU1

Niche height in mm min.	2134
Niche height in mm max.	2164
Niche depth in mm	629
Appliance width in mm	451
Appliance height in mm	2127
Appliance depth in mm	545
Weight in kg	122,2
Door hinge technology	Fixed door
Max. door front weight – refrigerator, in kg	59
Climate range	SN-T
4* freezer compartment in l	240
Total usable capacity in l	268
Storage time in case of fault in h	10
Freezer capacity in kg/24 h	16,00
Acoustic airborne noise emission class (A–D)	D
Sound emissions in dB(A) re 1 pW	42
Current consumption (mA)	3000
Voltage in V	220-240
Fuse rating in A	10
Number of phases	1
Frequency in Hz	50-60
Length of supply lead in m	3,0
Accessories included	
Water filter	Nein
Available display languages	
Available display languages via MultiLingua	□□□□□□□□, □□, □□□□□, deutsch, dansk, english, english (AU), english (CA), english (GB), english (US), eesti, suomi, français, français (CA), français (FR), ελληνικά, italiano, □□□, □□□, hrvatski, latviesu, lietuviu, bahasa malaysia, nederlands, norsk, polski, português, română, русский, svenska, srpski, slovenčina, slovenščina, español, čeština, türkçe, українська, magyar

F 2413 Vi
MasterCool freezer
For high-end design and technology on a large scale.

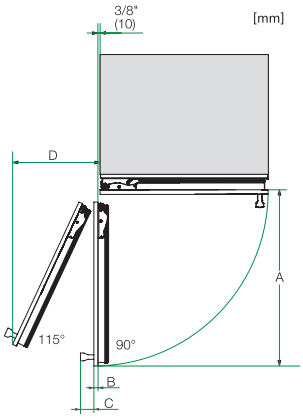

Opening angle 90°/115°, right side stop, MasterCool (Sketch) with footnote

A) Appliance door , K 2611 Vi, KWT 2611 Vi, KWT 2611 SF, KWT 2671 ViS: 677 mm (26 2/3 inch); , K 2612 Vi, KWT 2612 Vi, KWT 2612 SF, KWT 2672 ViS: 677 mm (26 2/3 inch);, K 2811 Vi, K 2811 SF, KF 2811 Vi, KF 2811 SF: 829 mm (32 2/3 inch);, K 2812 Vi, K 2812 SF, KF 2812 Vi, KF 2812 SF: 829 mm (32 2/3 inch);, K 2911 Vi, K 2911 SF, KF 2911 Vi, KF 2911 SF: 982 mm (38 2/3 inch);, K 2912 Vi, K 2912 SF, KF 2912 Vi, KF 2912 SF: 982 mm (38 2/3 inch);, B) Furniture front (max. 38 mm) (1 1/2 inch), C) Door handle, D) Distance from the door to the wall (without furniture front and door handle): , K 2611 Vi, KWT 2611 Vi, KWT 2611 SF, KWT 2671 ViS: 296 mm (11 2/3 inch);, K 2612 Vi, KWT 2612 Vi, KWT 2612 SF, KWT 2672 ViS: 296 mm (11 2/3 inch);, K 2811 Vi, K 2811 SF, KF 2811 Vi, KF 2811 SF: 363 mm (14 1/3 inch);, K 2812 Vi, K 2812 SF, KF 2812 Vi, KF 2812 SF: 363 mm (14 1/3 inch);, K 2911 Vi, K 2911 SF, KF 2911 Vi, KF 2911 SF: 428 mm (16 7/8 inch);, K 2912 Vi, K 2912 SF, KF 2912 Vi, KF 2912 SF: 428 mm (16 7/8 inch);, E) ONLY valid for SF versions: A + 25 mm (1 inch)

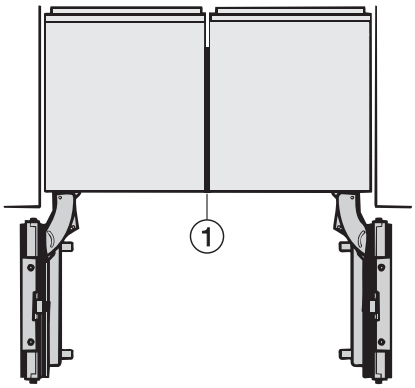

Side-by-side, MasterCool, without partition wall, with heating mat (Sketch) (with footnote)

1) Heating mat KSK 2001 (EU, AUS, CN) or KSK 2002 (US, CA, MX, BR)

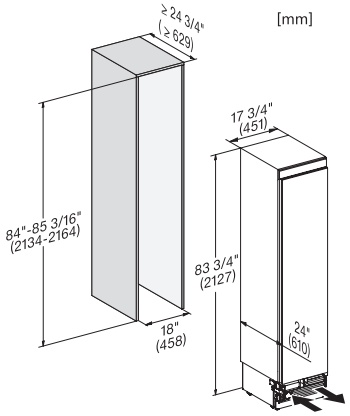

F2413Vi, F2412Vi, F2411Vi, MasterCool, inner space, installation drawings

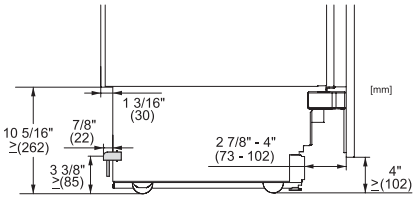

Sideview, MasterCool, Sketch

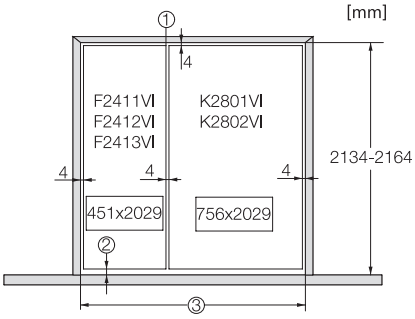

Example for diminsioning Side-by-side-Combination MasterCool (Sketch) (*footnote) (only for EUROPE)

*Niche height, 1 = Side-by-side fitting kit including pre-installed side wall heating KSK 200x, 2 = Furniture plinth height 102 - 132 mm (the appliance feet can be adjusted up to 30 mm high), 3 = Total appliance niche width 1220 mm (458 mm + 762 mm)

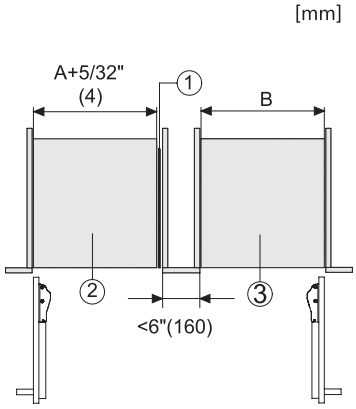

Side-by-Side, MasterCool, footnote, installation drawings

1. KSK 2001/2002, 2. Device A, 3. Device B, A = niche device A, B = niche device B

F 2413 Vi
MasterCool freezer
For high-end design and technology on a large scale.

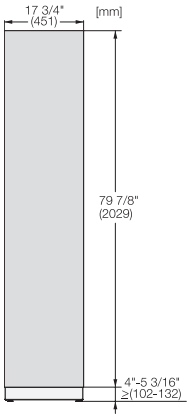

KFP1805ed/cs, KFP1804ed/cs, Front panel, Front dimensions, MasterCool, installation drawings

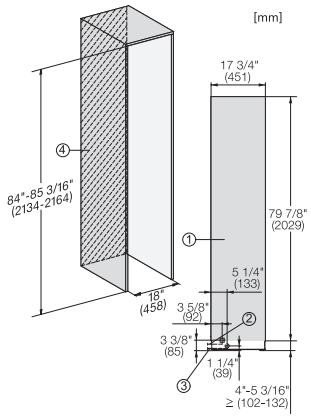

F2413Vi, F2471Vi, F2471SF, F2461Vi, F2411Vi, F2411SF, installation, MasterCool, installation drawings

1. View from the front, 2. Mains Connection cable, L = 3000 mm (118 inch), 3. Water inlet positon, L = 2000 mm (not for KON USA), 4. No water/ELT conections permitted in this area