DGC 7860 HC Pro
Combination steam oven
for steam cooking, baking, roasting with wireless food probe + HydroClean.



- Large touch display with proximity sensor – M Touch + MotionReact
- Perfect results – DualSteam technology
- Crispy outside, succulent inside – combination cooking
- Miele@home – network-enabled WiFi appliance + Mix & Match
- Easy cleaning – HydroClean and stainless steel oven compartment

EAN: 4002516626428 / Material number: 12101540 /
Old Material Number: 23786029GB

General information	
Model identifier	DGC 7860 HC Pro
Manufacturer material number	12101540
EAN number	4002516626428
Marketing class	Diamond
Construction type and design	
VitroLine	•
Construction type and design	
Steam combination oven	•
Colour	Obsidian black
Convenience features	
Rapid heat-up	•
Pre-heating	•
External steam generation	•
Oxygen sensor	•
Individual humidity settings in combination cooking	•
Menu cooking without transfer of taste	•
Mix & Match	•
Food probe	Without cable
Automatic programmes with ability to make individual adjustments	•
Keeping warm	•
Crisp function	•
Operating modes	
Fan plus	•
Conventional heat	•
Steam cooking	•
Combination cooking	•
Combination cooking with Fan plus	•
Combination cooking with Conventional heat	•
Combination cooking with grill large	•
Sous-vide	•
Intensive bake	•
Fan grill	•
Grill	•
Economy grill	•
Top heat	•
Bottom heat	•
Cake plus	•
Eco hot air	•
Eco steam cooking	•
Defrost	•
Roast with moisture	•
Reheat	•
Plate warming	•
Automatic programmes	•
Country-specific automatic programmes	•
Special applications	•

DGC 7860 HC Pro
Combination steam oven
for steam cooking, baking, roasting with wireless food probe + HydroClean.



EAN: 4002516626428 / Material number: 12101540 /
Old Material Number: 23786029GB

User convenience	
Networking with Miele@home	•
Display	M Touch
MotionReact proximity sensor	•
SoftOpen	•
SoftClose	•
MultiLingua	•
MyMiele	•
Help function	•
Motorised lift-up control panel with SoftClose	•
Quantity-independent cooking	•
Steam cooking on up to 4 levels at the same time	•
Automatic menu cooking	•
Steam reduction before end of programme	•
Polyphonic buzzers	•
Time of day display	•
Date display	•
Minute minder	•
Programmable start of cooking duration	•
Programmable end of cooking duration	•
Programmable cooking duration	•
Actual temperature display	•
Target temperature display	•
Buzzer when desired temperature is reached	•
Recommended temperature	•
User programmes	•
Sabbath programme	•
Individual settings	•
Efficiency	
Energy efficiency class (A+++ – D)	A+
Power rating in off mode in W	0,3
Power rating in standby mode in W	0,8
Power rating in networked standby in W	2,0
Time until automatic switch to standby in min	20
Time until automatic switch to networked standby in min	20
Time until automatic switch to off mode in min	20
Cleaning and care	
Stainless-steel oven compartment with linen structure	•
Hinged grill element	•
External steam generator	•
HydroClean	•
Soak programme	•
Rinse programme	•
Oven compartment drying programme	•
Quick-release side racks	•
Removable stainless-steel side racks	•
Automatic descaling	•
CleanGlass door	•

DGC 7860 HC Pro
Combination steam oven
for steam cooking, baking, roasting with wireless food probe + HydroClean.

EAN: 4002516626428 / Material number: 12101540 /
Old Material Number: 23786029GB

Steam techn./water supply	
DualSteam	•
Steam generator power in kW	3,30
Fresh water container volume in l	1,4
Fresh water container behind motorised control panel	•
Condensate container behind motorised lift-up control panel with SoftClose	•
DirectWater	No
Drain filter	•
Safety	
Appliance cooling system and touch-cool front	•
Safety switch-off	•
System lock	•
Vapour cooling system	•
Sensor lock	•
Technical data	
Oven compartment volume in l	67
No. of shelf levels	4
Numbered shelf levels	•
Door hinge	Bottom
Oven light	BrilliantLight
Oven mode temperatures min. in °C	30
Oven mode temperatures max. in °C	230
Steam-cooking mode temperatures min. in °C	40
Steam-cooking mode temperatures max. in °C	100
Niche width min. in mm	560
Niche width max. in mm	568
Niche height min. in mm	590
Niche height max. in mm	595
Niche depth in mm	550
Appliance dimensions (W x H x D) in mm	595 x 596 x 567
Weight in kg	46,4
Total rated load in kW	3,45
Voltage in V	230
Frequency in Hz	50
Fuse rating in A	16
Number of phases	1
Mains cable with plug	•
Length of supply lead in m	2
Replacing lamps	Service
Accessories included	
Universal tray with PerfectClean HUBB 71	1
Baking and roasting rack with PerfectClean HBBR 71	1
PerfectClean FlexiClip runners HFC 71 (pair)	1
Wireless food probe	1
Removable side runners (pair)	1
Perforated stainless-steel cooking containers	2
Solid stainless steel cooking containers	1
HydroClean cleaning agent	1

DGC 7860 HC Pro
Combination steam oven
for steam cooking, baking, roasting with wireless food probe + HydroClean.



EAN: 4002516626428 / Material number: 12101540 /
Old Material Number: 23786029GB

Descaling tablets	2
Available display languages	
Available display languages via MultiLingua	□□□□□□□□, □□, □□□□, deutsch, dansk, english, suomi, français, ελληνικά, italiano, □□□, □□□, hrvatski, bahasa malaysia, nederlands, norsk, polski, português, română, русский, svenska, srpski, slovenčina, slovenščina, español, čeština, türkçe, українська, magyar

DGC 7860 HC Pro
Combination steam oven
for steam cooking, baking, roasting with wireless food probe + HydroClean.

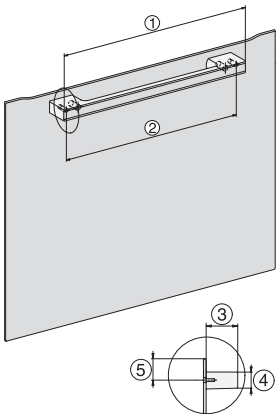

H7000 handle, glass, installation drawings

1) 400 mm, 2) 360 mm, 3) 47 mm, 4) 27 mm, 5) 32.5 mm

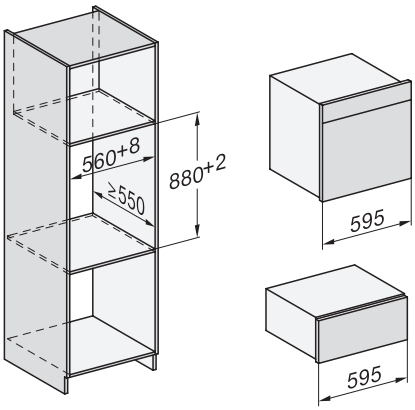

Installation DGC XXL, ESW7x20 installation drawings

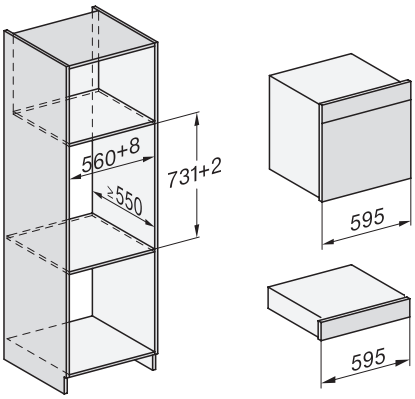

Installation_DGC_XXL_ESW7x10_EVS7010 installation drawings

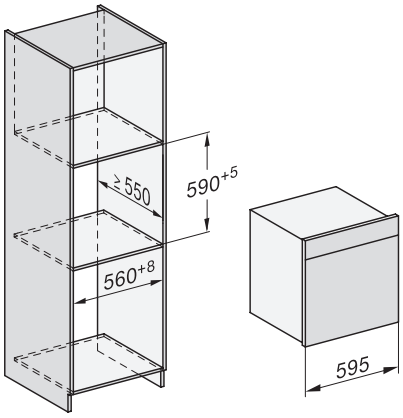

built-in DGC XXL, installation drawing

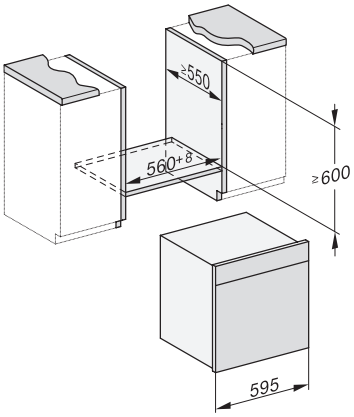

built-in DGC XXL build-under, installation drawing

Worktop overhang ≤ 29 mm

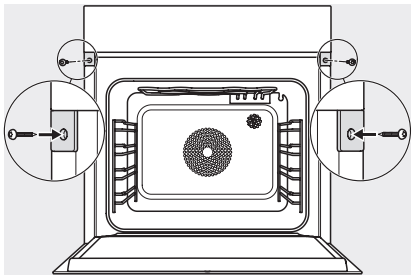

screw joint DGC XXL, installation drawing

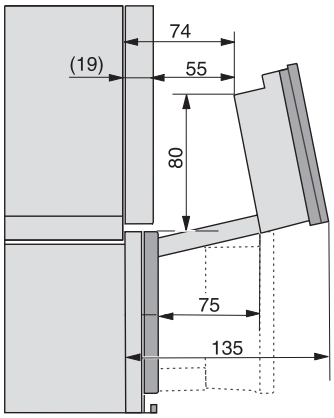

DGC7x4x swivel range of the aperture, installation drawings

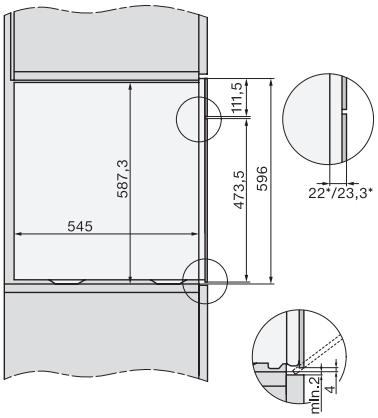

side view DGC XXL, installation drawings

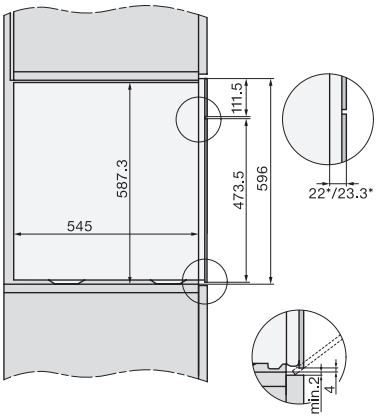

Seitenansicht DGC XXL, installation drawing, GB, AU

22 mm glass, 23,3 mm stainless steel