KM 3034-1
Gas hob
with electronic functions for maximum safety and user convenience.



- Optimal – single-handed operation via rotary dials and QuickStart
- Elegant design – 806 mm wide gas hob on glass for surface-mounted installation
- Particularly versatile – 5 burners incl. 1 dual wok
- Extremely safe – GasStop&Restart function
- Easy cleaning – dishwasher-safe ComfortClean pot rests

EAN: 4002516127567 / Material number: 10939730 / Old Material Number: 26303451I

General information	
Model identifier	KM 3034-1
Manufacturer material number	10939730
EAN number	4002516127567
Marketing class	Gold
Heating type	
Heating type	Gas
Construction type	
Independent of cooker	•
Design	
Elegant glass ceramic surface	•
Ceramic surface colour	Black
Cast iron pot rests (matt black enamelled)	•
Cooking zone details	
Number of cooking zones	5
Gas burner power rating	
Small burner in kW	1,00
Medium burner in kW	1,70
Large burner in kW	2,70
Dual wok burner in kW	4,70
1st cooking zone/cooking area	
Position	front left
Type	High-speed burner
2nd cooking zone/cooking area	
Position	rear left
Type	Economy burner
3rd cooking zone/cooking area	
Position	Centred
Type	Dual wok burner
4th cooking zone/cooking area	
Position	rear right
Type	Standard burner
5th cooking zone/cooking area	
Position	front right
Type	Standard burner
User convenience	
Operation via knobs	•
Display colour	Red
Electronic ignition with single-hand operation	•
QuickStart	•
Cleaning and care	
Easy to clean ceramic glass	•
Dishwasher-proof pot rests	•
Safety	
Heat indicator	•
Operational indicator	•
GasStop & ReStart	•

KM 3034-1
Gas hob
with electronic functions for maximum safety and user convenience.

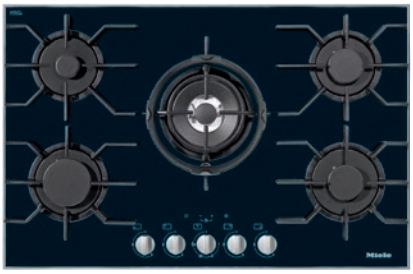

EAN: 4002516127567 / Material number: 10939730 / Old Material Number: 26303451I

Technical data	
Dimensions (H x W x D) in mm	53 x 806 x 526
Dimensions in mm (width)	806
Dimensions in mm (height)	53
Dimensions in mm (depth)	526
Casing height incl. connection box in mm	78
Cutout dimensions in mm (width) with surface-mounted installation	780 mm
Cutout dimensions in mm (depth) with surface-mounted installation	500 mm
Weight in kg	20
Total rated load in kW	0,00-0,00
Length of supply lead in m	2,0
Position of gas connection	Hinten rechts
Voltage in V	220-240
Frequency in Hz	50-60
Accessories included	
Mains cable	No
Wok ring	•
Small trivet	•

KM 3034-1
Gas hob
with electronic functions for maximum safety and user convenience.

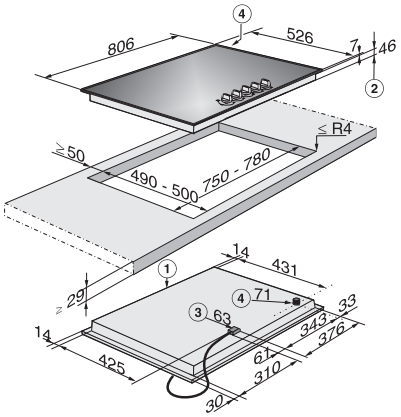

KM 3034-1 G (Installation drawing)

1. Front, 2. Casing depth, 3. Mains connection box with mains connection cable L = 2000 mmm, 4. Gas connection R 1/2" – ISO 7-1 (DIN EN 10226)