WTR860WPM PWash&TDos 8/5kg
WT1 washer-dryer:
8/5 kg I 1600 rpm I M Touch I TwinDos I SteamCare



- Tested for 20 years of perfect laundry care*
- 2 in 1: wash 8 kg and dry 5 kg in a single appliance
- M Touch – simple control by tapping or swiping
- Precise and automatic detergent dispensing with TwinDos®**
- SteamCare reduces ironing time by up to 50 % and freshens up your clothes

* During the development phase of the WT1 washer-dryer series, Miele tested models and core components in 5000 wash and 4000 drying cycles (= 5 wash and 4 drying cycles per week for 50 weeks per year) in various programmes. More: miele.com/20years

** Patent EP 2 784 205

EAN: 4002516371021 / Material number: 11576550 / Old Material Number: 11TR8604GB

General information	
Model identifier	WTR860WPM PWash&TDos 8/5kg
Manufacturer material number	11576550
EAN number	4002516371021
Marketing class	Diamond
Construction type	
Suitable for stacking	•
Door hinging	right
Side-by-side	•
Slot-in	•
Can be built-under	•
Model	
Front-loader	•
Washing machine with TD fct.	
Continuous washing and drying cycle	•
Electronic residual moisture sensing	•
Condenser dryers with water cooling	•
Thermospin	•
Spinning	
Max. spin speed	1600
Rinse hold	•
Without spin function	•
Design	
Appliance colour	Lotus white
Control panel colour	Lotus white
Door design	Chrome
Control panel version	Straight
Control type	Touch control
Display	MTouch
Cleaning performance	
PowerWash	•
TwinDos automatic detergent dispensing	•
CapDosing portioned dispensing	•
Stains option	•
Certified virus hygiene	•
Gentle laundry care	
Honeycomb drum	•
Load in kg for washing	8
Load in kg when drying	5
PerfectCare technology	•
User convenience	
Networking with Miele@home	•
Delay start up to 24 hours	•
Time left display	•
Time of day display	•
Programme sequence indicator	in display
Favourite programmes	•

WTR860WPM PWash&TDos 8/5kg
WT1 washer-dryer:
8/5 kg I 1600 rpm I M Touch I TwinDos I SteamCare



EAN: 4002516371021 / Material number: 11576550 / Old Material Number: 11TR8604GB

Automatic rinse out fluff	•
Drum lighting	LED
MultiLingua	•
AutoClean detergent drawer	•
AddLoad	•
Efficiency	
Energy efficiency class (A–G)	A
Energy efficiency class for washing and drying (A–G)	D
Weighted energy consumption per 100 operating cycles for the complete operating cycle in kWh	262
Weighted energy consumption per 100 operating cycles for the wash cycle in kWh	46
Weighted water consumption per operating cycle for the wash cycle in l	47
Weighted water consumption per operating cycle for the complete operating cycle in l	68
Spin efficiency class (A–G)	A
Acoustic airborne noise emission class (spin cycle; A–D)	A
Sound emissions during spin cycle in dB(A) re 1 pW	69
Programme running time at nominal capacity for the wash cycle	219
Programme running time at nominal capacity for the complete operating cycle	389
Power rating in off mode in W	0,10
Power rating in networked standby in W	0,50
Low temperature wash "Cold" and "20 °C"	•
Automatic load control	•
Flow meter	•
Foam sensing	•
ProfiEco motor	•
Wash programmes	
QuickPower	•
Automatic	•
Cottons (coloureds)	•
Minimum iron	•
Shirts	•
Silk (hand-washable)	•
Woollens (hand-washable)	•
Express	•
Dark garments	•
Denim	•
Outerwear	•
Proofing	•
Sportswear	•
Trainers	•
Pillows	•
Down	•
Curtains	•
Cottons hygiene	•
Clean machine	•

WTR860WPM PWash&TDos 8/5kg
WT1 washer-dryer:
8/5 kg I 1600 rpm I M Touch I TwinDos I SteamCare

EAN: 4002516371021 / Material number: 11576550 / Old Material Number: 11TR8604GB

Cottons arrow	•
First wash	•
Starch	•
ECO 40-60	•
Drying programmes	
QuickPower	•
Automatic	•
Cottons (coloureds)	•
Cottons arrow	•
Minimum iron	•
Delicates	•
Shirts	•
Silk	•
Woollens	•
Express	•
Dark garments	•
Denim	•
Outerwear	•
Proofing	•
Sportswear	•
Trainers	•
Standard pillows	•
Cottons hygiene	•
First wash	•
Cool air	•
Warm air	•
Freshen up	•
Steam care	•
Washing extras	
Short	•
Soak	•
Pre-wash	•
Water plus	•
Additional rinse cycle	•
Pre-ironing with steam	•
Buzzer	•
AllergoWash	•
Single	•
Drying extras	
Anti-crease	•
Safety	
Water protection system	Waterproof-Metal
PIN-Code	•
Optical interface	•
Technical data	
Dimensions in mm (width)	596
Dimensions in mm (height)	850
Dimensions in mm (depth)	637
Appliance depth in mm with opened door	1055

WTR860WPM PWash&TDos 8/5kg
WT1 washer-dryer:
8/5 kg I 1600 rpm I M Touch I TwinDos I SteamCare



EAN: 4002516371021 / Material number: 11576550 / Old Material Number: 11TR8604GB

Weight in kg	98
Voltage in V	220-240
Fuse rating in A	13
Frequency in Hz	50
Total rated load in kW	2,10-2,40
Length of supply lead in m	2
Accessories included	
3 Caps	•
UltraPhase 1 + 2	•
Voucher for 5 Miele UltraPhase cartridges	•
Available display languages	
Available display languages via MultiLingua	□□□□□□□, □□, □□□□, deutsch, dansk, english (AU), english (CA), english (GB), english (US), suomi, français (CA), français (FR), ελληνικά, italiano, □□□, □□□, hrvatski, bahasa malaysia, nederlands, norsk, polski, português, română, русский, svenska, srpski, slovenčina, slovenščina, español, čeština, türkçe, українська, magyar

WTR860WPM PWash&TDos 8/5kg
WT1 washer-dryer:
8/5 kg I 1600 rpm I M Touch I TwinDos I SteamCare

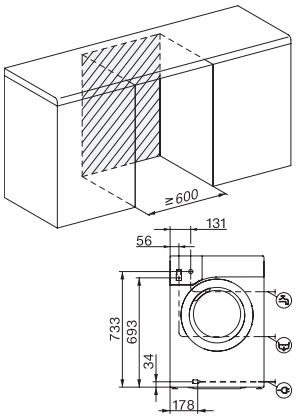

WT1 8/5 kg, installation drawing, slanted facia or straight facia, measures in mm

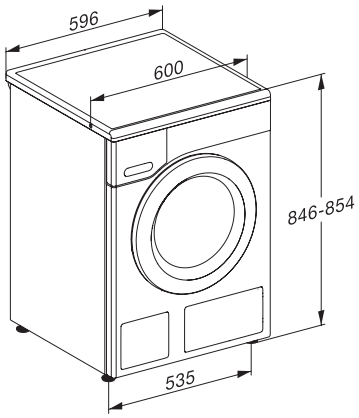

WT1 8/5 kg, drawing, straight facia, measures in mm

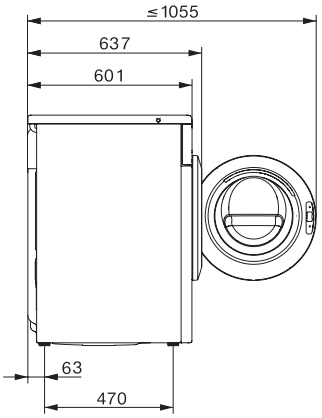

WT1 8/5 kg, drawing, straight facia, measures in mm

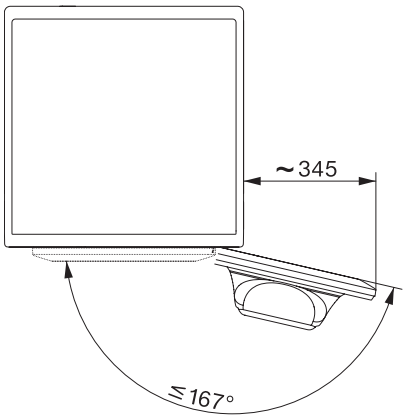

WT1 8/5 kg, drawing, straight facia, measures in mm