KS 7743 E
Built-in refrigerator, 178 cm niche height
PerfectFresh Pro and DynaCool for professional storage.



- Professional storage – fresher for longer with PerfectFresh Pro
- Optimum and maintenance-free LED lighting in compartment
- Uniform temperature distribution inside the appliance – DynaCool
- No visible build-up of condensation thanks to dry back wall
- Dishwasher-proof door shelves – ComfortClean

EAN: 4002516421061 / Material number: 11738400 /
Old Material Number: 36774301AUS

General information	
Model identifier	KS 7743 E
Manufacturer material number	11738400
EAN number	4002516421061
Marketing class	Gold
Appliance category	
Refrigerator	•
Construction type	
Built-in appliance	•
Integrated appliance	•
Door hinge	right
Convertible door hinging	•
Side-by-side enabled	•
User convenience	
Fridge zone lighting	LED
Networking with Miele@home	•
Freshness system	PerfectFresh Pro
ComfortClean	•
ComfortSize	•
DynaCool	•
Party mode	•
Holiday mode	•
Control system	
Operating concept	SensorTouch
Fridge compartment can be switched off	No
SuperCool	•
No. of temperature zones	2
Sabbath mode	•
Fridge/Fridge section	
No. of shelves	6
Chrome-plated metal bottle rack	•
No. of crisper drawers	3
Dry back wall	Plastic
Number of inner door racks for tinned food	2
Door rack for bottles	2
Door shelves	4
Safety	
Lock function	•
Acoustic door alarm	•
Optical door alarm	•
Technical data	
Niche width in mm min.	560
Niche width in mm max.	570
Niche height in mm min.	1772
Niche height in mm max.	1788
Niche depth in mm	550
Appliance width in mm	559
Appliance height in mm	1770

KS 7743 E
Built-in refrigerator, 178 cm niche height
PerfectFresh Pro and DynaCool for professional storage.



EAN: 4002516421061 / Material number: 11738400 /
Old Material Number: 36774301AUS

Appliance depth in mm	546
Weight in kg	61,3
Door hinge technology	Fixed door
Max. door front weight – refrigerator, in kg	26
Climate range	SN-T
Refrigerator compartment in l	196
including PerfectFresh zone in l	98
Total usable capacity in l	294
Current consumption (mA)	1200
Voltage in V	220-240
Fuse rating in A	10
Number of phases	1
Frequency in Hz	50-60
Length of supply lead in m	2,2
Replacing lamps	Service
Accessories included	
Egg tray	•
Water filter	Nein

KS 7743 E

Built-in refrigerator, 178 cm niche height

PerfectFresh Pro and DynaCool for professional storage.

[mm]

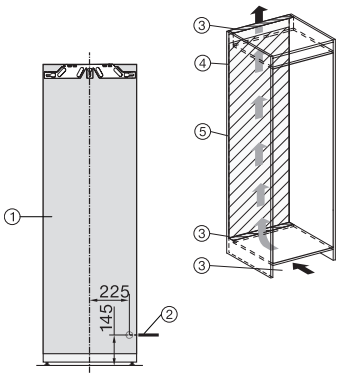

K7733E, K7763E, K7732E, K7734F, K7764E, K7743E, K7744E, K7773D, K7774D

1. View from the front, 2. Mains connection cable, L = 2200 mm, 3. Ventilation cut-out min. 200 cm², 4. Ventilation, 5. No connections permitted in this area

[mm]

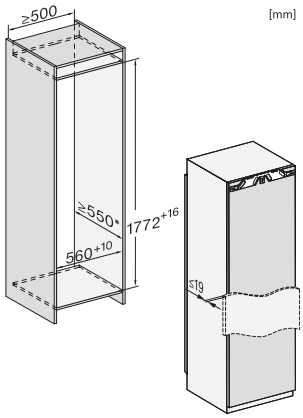

K7733E, K7763E, K7732D, K7732E, K7734F, K7764E, K7743E, K7744E, K7773D, K7774D, built-in

*The declared energy consumption was calculated in a 560 mm deep niche. The appliance is fully functional in a 550 mm niche but the energy consumption will be slightly higher.

[mm]

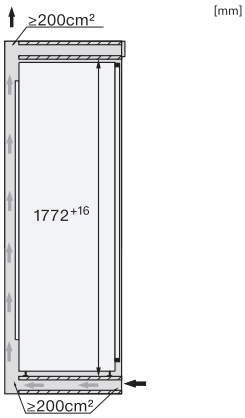

K7733E, K7763E, K7732E, K7734F, K7764E, K7743E, K7744E, K7773D, K7774D, side view