KMDA 7876-1 FL MattFinish
Induction hob with integrated vapour extraction
800 mm | Extraction and recirculation | SilenceMotor | PowerFlex XL cooking area | MattFinish



- The quietest TwoInOne from Miele – Silence motor
- Elegant surface for a unique kitchen design – MattFinish
- Ample space – 4 large cooking zones incl. 2 PowerFlex XL areas
- Networking with Con@ctivity and Miele@home
- Flexible installation – Plug & Play, ducted recirculation or vented system

EAN: 4002516974581 / Material number: 12968780 / Old Material Number: 26787675GB

General information	
Model identifier	KMDA 7876-1 FL MattFinish
Manufacturer material number	12968780
EAN number	4002516974581
Marketing class	Diamond
Construction type	
Induction hob with integrated vapour extraction	•
Operating modes	
Exhaust air guided with optional accessories	DFK-xxxx,DMK 150-1
Recirculation air guided with optional accessories	DFK-xxxx,DUU 1500,DUU 600
Unguided recirculation air (Plug&Play installation)	•
Design	
Elegant glass ceramic surface	•
Frameless – surface-mounted	•
Ceramic surface colour	Matt black
Scratch-resistant surface	MattFinish
Anti-fingerprint effect	•
Flush fit extractor	•
Flush	•
Colour of cover grille	Black
Grease filter colour	Black
Cooking zone details	
Number of cooking zones	4
Number of cooking areas	2
Maximum number of pans	4
PowerFlex cooking zones	
No.	4
Type	PowerFlex XL cooking area
Size in mm	Ø 150 – 230
Max. rating in W	2100
Max. Booster power rating in W	3000
Max. TwinBooster power rating in W	3650
1st cooking zone/cooking area	
Position	Left
Type	PowerFlex XL cooking area
Size in mm	230x460
Max. rating in W	3400
Max. Booster power rating in W	4800
Max. TwinBooster power rating in W	7300
2nd cooking zone/cooking area	
Position	right
Type	PowerFlex XL cooking area
Size in mm	230x460
Max. rating in W	3400
Max. Booster power rating in W	4800
Max. TwinBooster power rating in W	7300

KMDA 7876-1 FL MattFinish
Induction hob with integrated vapour extraction
800 mm | Extraction and recirculation | SilenceMotor | PowerFlex XL cooking area | MattFinish



EAN: 4002516974581 / Material number: 12968780 / Old Material Number: 26787675GB

User convenience	
Networking with Miele@home	•
Con@ctivity	•
Digital power level display	•
Operation via sensor controls	ComfortSelect White
Display colour	White
Permanent pan recognition	•
Run-on time 5/15 min.	•
Active charcoal filter saturation indicator	•
Stop & Go function	•
Wipe protection	•
Recall function	•
Grease filter saturation indicator	•
Minute minder	•
Safety switch-off	•
Auto heat-up	•
Keeping warm	•
Individual setting options (e.g. buzzers)	•
Easy-to-clean canopy interior – CleanCover	•
Efficiency	
Energy efficiency class (A+++ – D)	A+
Power rating in off mode in W	0,3
Power rating in networked standby in W	2,0
ECO motor	•
Time until automatic switch to standby in min	10
Annual energy consumption in kWh/year	31,3
Time until automatic switch to networked standby in min	10
Time until automatic switch to off mode in min	10
Fluid dynamic efficiency class	A
Lighting efficiency class	NA
Grease filtering efficiency class	A
Cleaning and care	
Easy to clean ceramic glass	•
Quick cleaning of cooker hood interior	•
Intensive cleaning of cooker hood interior	•
Filter system	
Number of dishwasher-safe stainless steel grease filters (10-ply)	1
Exhaust air	
Air throughput at min. level (m^3/h) according to EN 61591	205
Air throughput at max. level (m^3/h) according to EN 61591	533
Air throughput in Intensive level (m^3/h) according to EN 61591	606
Sound power at min. level (dB(A) re 1 pW) according to EN 60704-3	41
Sound power at max. level (dB(A) re 1 pW) according to EN 60704-3	64
Sound power in Booster level (dB(A) re 1 pW) acc. to EN 60704-3	68

KMDA 7876-1 FL MattFinish
Induction hob with integrated vapour extraction
800 mm | Extraction and recirculation | SilenceMotor | PowerFlex XL cooking area | MattFinish

EAN: 4002516974581 / Material number: 12968780 / Old Material Number: 26787675GB

Sound pressure at min. level (dB(A) re 20 µPa) according to EN 60704-2-13	28,0
Sound pressure at max. level (dB(A) re 20 µPa) according to EN 60704-2-13	51,0
Noise pressure level in Intensive level (dB(A) re 20 µPa) according to EN 60704-2-13	54,0
Recirculation	
Air throughput at min. level (m^3/h) according to EN 61591	160
Air throughput at max. level (m^3/h) according to EN 61591	475
Air throughput in Booster level 1 (m^3/h) according to EN 61591	510
Sound power at min. level (dB(A) re 1 pW) according to EN 60704-3	46,0
Sound power at max. level (dB(A) re 1 pW) according to EN 60704-3	68,0
Sound power in Booster level 1 (dB(A) re 1 pW) acc. to EN 60704-3	70,0
Sound pressure at min. level (dB(A) re 20 µPa) according to EN 60704-2-13	33,0
Sound pressure at max. level (dB(A) re 20 µPa) according to EN 60704-2-13	55,0
Sound pressure in Booster level 1 (dB(A) re 20 µPa) acc. to EN 60704-2-13	57,0
Safety	
Safety switch-off	•
Lock function	•
System lock	•
Integrated cooling fan	•
Overheating protection	•
Residual heat indicator	•
Connection for window contact switch	•
Technical data	
Dimensions in mm (width)	800
Dimensions in mm (height)	238
Dimensions in mm (depth)	520
Casing height incl. connection box in mm	238
Cutout dimensions in mm (width) with surface-mounted installation	780 mm
Cutout dimensions in mm (depth) with surface-mounted installation	500 mm
Internal cutout dimensions in mm (width) with flush installation	780
Internal cutout dimensions in mm (depth) with flush installation	500
Weight in kg	20
External cutout dimensions in mm (width) with flush installation	804
External cutout dimensions in mm (depth) with flush installation	524
Total rated load in kW	7,50
Voltage in V	230
Frequency in Hz	50-60

KMDA 7876-1 FL MattFinish
Induction hob with integrated vapour extraction
800 mm | Extraction and recirculation | SilenceMotor | PowerFlex XL cooking area | MattFinish



EAN: 4002516974581 / Material number: 12968780 / Old Material Number: 26787675GB

Length of supply lead in m	1,4
Accessories included	
Mains cable	Yes
Active charcoal filter DKF 35-P	•
Plug&Play adapter	•

KMDA 7876-1 FL MattFinish
Induction hob with integrated vapour extraction
800 mm | Extraction and recirculation | SilenceMotor | PowerFlex XL cooking area | MattFinish

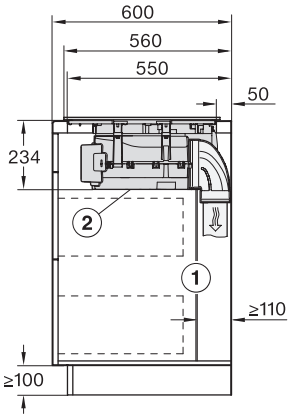

KMDA7676-1FL, KMDA7876-1FL, KMDA7676FL, KMDA7876FL – Side view lying on top

The rear wall of the cabinet must be removable for servicing. A minimum distance of 110 mm must be maintained for routing the exhaust air duct between the cabinet wall and an adjacent room wall or furniture., The removable collection tray and the cleaning flap must be accessible after installation.

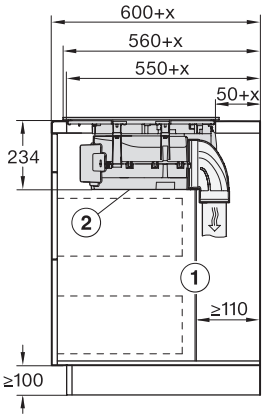

KMDA7676-1FL, KMDA7876-1FL, KMDA7676FL, KMDA7876FL – Side view lying on top+X

The rear wall of the cabinet must be removable for servicing. A minimum distance of 110 mm must be maintained for routing the exhaust air duct between the cabinet wall and an adjacent room wall or furniture., The removable collection tray and the cleaning flap must be accessible after installation., , x Dimension by which the worktop depth is greater than 600 mm.

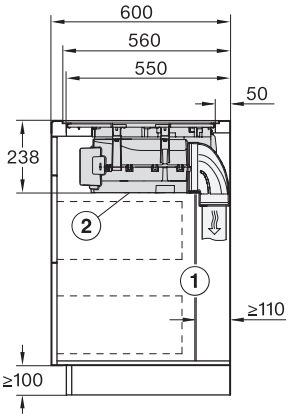

KMDA7676-1FL, KMDA7876-1FL, KMDA7676FL, KMDA7876FL – Side view flush

The rear wall of the cabinet must be removable for servicing. A minimum distance of 110 mm must be maintained for routing the exhaust air duct between the cabinet wall and an adjacent room wall or furniture., The removable collection tray and the cleaning flap must be accessible after installation.

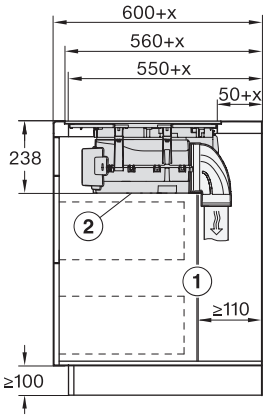

KMDA7676-1FL, KMDA7876-1FL, KMDA7676FL, KMDA7876FL – Side view flush+X

The rear wall of the cabinet must be removable for servicing. A minimum distance of 110 mm must be maintained for routing the exhaust air duct between the cabinet wall and an adjacent room wall or furniture., The removable collection tray and the cleaning flap must be accessible after installation., , x Dimension by which the worktop depth is greater than 600 mm.

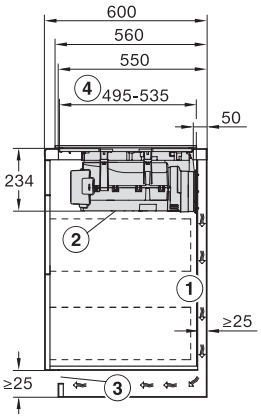

KMDA7676-1FL, KMDA7876-1FL, KMDA7676FL, KMDA7876FL – Side view lying on top, Plug&Play

When routing the exhaust air between the cabinet wall and an adjacent room wall or an adjacent piece of furniture, a minimum distance of 25 mm must be observed., The removable collection tray and the cleaning flap must be accessible after installation., The cross-section of the vent opening must be at least 425 cm², Distance from the front of the lower box to the end of the plug & play adapter

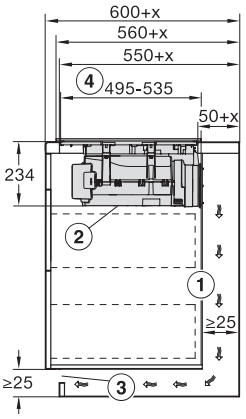

KMDA7676-1FL, KMDA7876-1FL, KMDA7676FL, KMDA7876FL – Side view lying on top+X, Plug&Play

When routing the exhaust air between the cabinet wall and an adjacent room wall or an adjacent piece of furniture, a minimum distance of 25 mm must be observed. If the carcase rear wall is > 555 mm from the worktop front, the Plug&Play adapter must be extended with a supplementary set from Miele., The removable drip tray and the cleaning flap must be accessible after installation., The cross-section of the vent opening must be at least 425 cm², Distance from the front of the lower box to the end of the plug & play adapter, , x Dimension by which the worktop depth is greater than 600 mm.

KMDA 7876-1 FL MattFinish
Induction hob with integrated vapour extraction
800 mm | Extraction and recirculation | SilenceMotor | PowerFlex XL cooking area | MattFinish

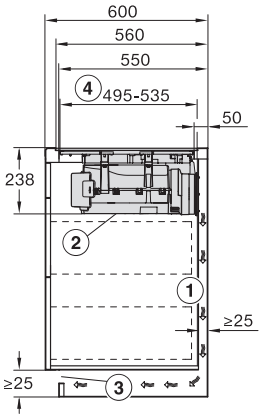

KMDA7676-1FL, KMDA7876-1FL, KMDA7676FL, KMDA7876FL – Side view flush, Plug&Play

?When routing the exhaust air between the cabinet wall and an adjacent room wall or an adjacent piece of furniture, a minimum distance of 25 mm must be observed., ?The removable collection tray and the cleaning flap must be accessible after installation., ?The cross-section of the ventilation opening must be at least 425 cm², ?Distance from the front of the lower box to the end of the plug & play adapter

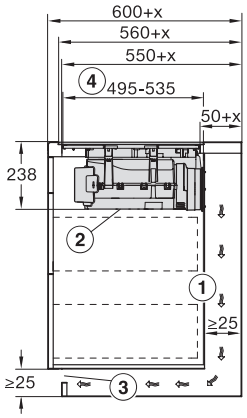

KMDA7676-1FL, KMDA7876-1FL, KMDA7676FL, KMDA7876FL – Side view flush+X, Plug&Play

?When routing the exhaust air between the cabinet wall and an adjacent room wall or an adjacent piece of furniture, a minimum distance of 25 mm must be observed. If the carcase rear wall is > 555 mm from the worktop front, the Plug&Play adapter must be extended with a supplementary set from Miele., ?The removable drip tray and the cleaning flap must be accessible after installation., ?The cross-section of the vent opening must be at least 425 cm²., ?Distance from the front of the lower box to the end of the plug & play adapter, , x Dimension by which the worktop depth is greater than 600 mm.

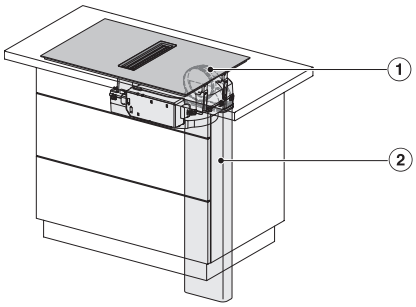

KMDA7676-1FL, KMDA7876-1FL, KMDA7676FL, KMDA7876FL – Installation variant 1 Basis

1) DFK-AK 90, 2) DFK-R 1000

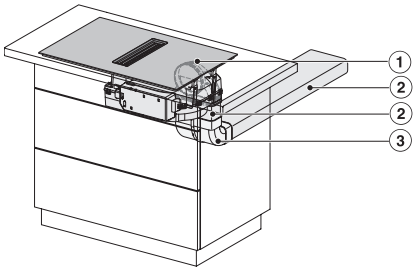

KMDA7676-1FL, KMDA7876-1FL, KMDA7676FL, KMDA7876FL – Installation variant 2 Basis

1) DFK-AK 90, 2) DFK-R 1000, 3) DFK-BV 90

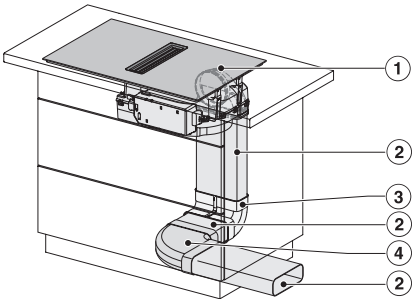

KMDA7676-1FL, KMDA7876-1FL, KMDA7676FL, KMDA7876FL -Installation variant 3 Basis – drawing

1) DFK-AK 90, 2) DFK-R 1000, 3) DFK-BV 90, 4) DFK-BH 90

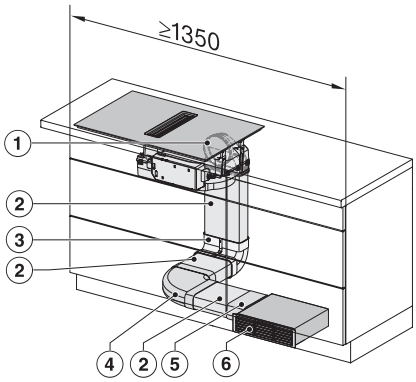

KMDA7676-1FL, KMDA7876-1FL, KMDA7676FL, KMDA7876FL – Installation variant 4 Circulating air

1) DFK-AK 90, 2) DFK-R 1000, 3) DFK-BV 90, 4) DFK-BH 90, 5) DFK-V, 6) DUU 1500, , The minimum width of the cabinet is 1350 mm.

KMDA 7876-1 FL MattFinish
Induction hob with integrated vapour extraction
800 mm | Extraction and recirculation | SilenceMotor | PowerFlex XL cooking area | MattFinish

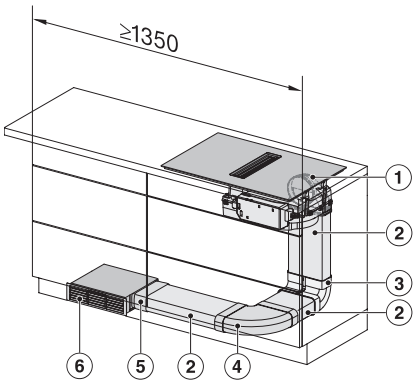

KMDA7676-1FL, KMDA7876-1FL, KMDA7676FL, KMDA7876FL – Installation variant 5 Circulating air

1) DFK-AK 90, 2) DFK-R 1000, 3) DFK-BV 90, 4) DFK-BH 90, 5) DFK-V, 6) DUU 1500, , The minimum depth of the cabinet is 935 mm.

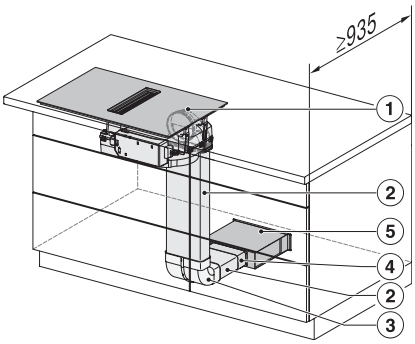

KMDA7676-1FL, KMDA7876-1FL, KMDA7676FL, KMDA7876FL – Installation variant 6 Circulating air

1) DFK-AK 90, 2) DFK-R 1000, 3) DFK-BV 90, 4) DFK-V, 5) DUU 1500, , The minimum depth of the cabinet is 935 mm.

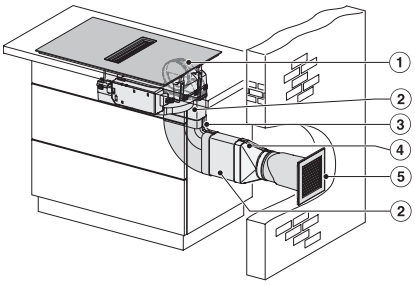

KMDA7676-1FL, KMDA7876-1FL, KMDA7676FL, KMDA7876FL – Installation variant 9 Exhaust air

1) DFK-AK 90, 2) DFK-R 1000, 3) DFK-BH 90, 4) DFK-A, 5) DMK 150-1

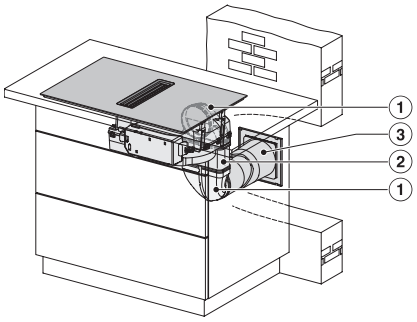

KMDA7676-1FL, KMDA7876-1FL, KMDA7676FL, KMDA7876FL – Installation variant 10 Exhaust air

1) DFK-AK 90, 2) DFK-R 1000, 3) DMK 150-1

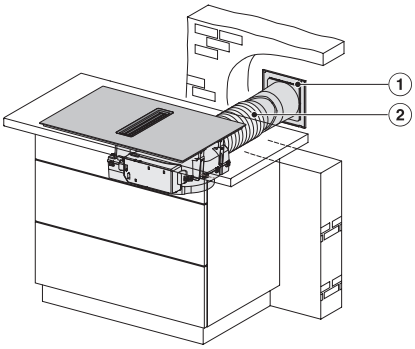

KMDA7676-1FL, KMDA7876-1FL, KMDA7676FL, KMDA7876FL – Installation variant 11 Exhaust air

1) DMK 150-1, 2) Flex hose

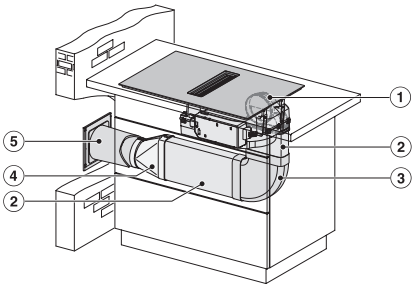

KMDA7676-1FL, KMDA7876-1FL, KMDA7676FL, KMDA7876FL – Installation variant 12 Exhaust air

1) DFK-AK 90, 2) DFK-R 1000, 3) DFK-BH 90, 4) DFK-A, 5) DMK 150-1

KMDA 7876-1 FL MattFinish
Induction hob with integrated vapour extraction
800 mm | Extraction and recirculation | SilenceMotor | PowerFlex XL cooking area | MattFinish

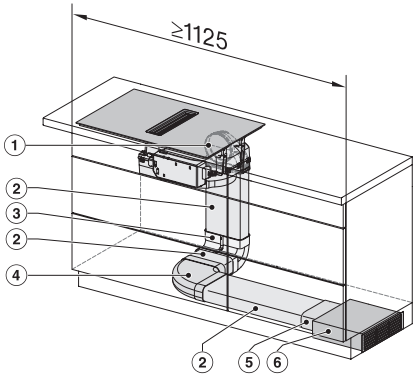

KMDA7676-1FL, KMDA7876-1FL, KMDA7676FL, KMDA7876FL – Installation variant 13 Circulating air

1) DFK-AK 90, 2) DFK-R 1000, 3) DFK-BV 90, 4) DFK-BH 90, 5) DFK-V, 6) DUU 1500, , The minimum width of the cabinet is 1125 mm.

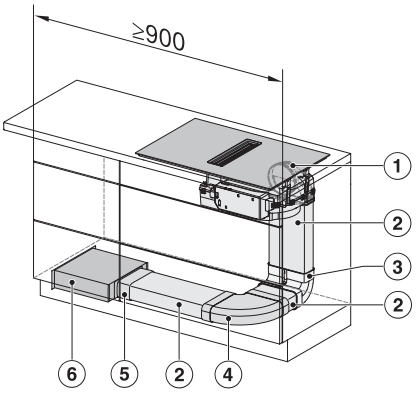

KMDA7676-1FL, KMDA7876-1FL, KMDA7676FL, KMDA7876FL – Installation variant 14 Circulating air

1) DFK-AK 90, 2) DFK-R 1000, 3) DFK-BV 90, 4) DFK-BH 90, 5) DFK-V, 6) DUU 1500, , The minimum width of the cabinet is 900 mm.

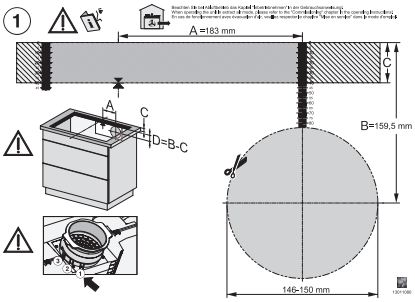

KMDA7676-1FL, KMDA7876-1FL – flush, drilling template, Installation depth 23,8 cm

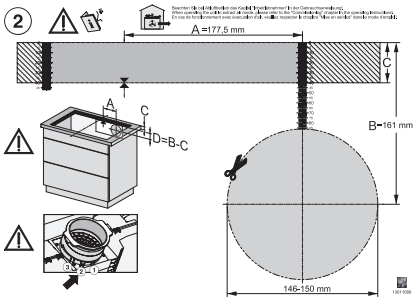

KMDA7676-1FL, KMDA7876-1FL – surface installation, drilling template, 23,8 cm

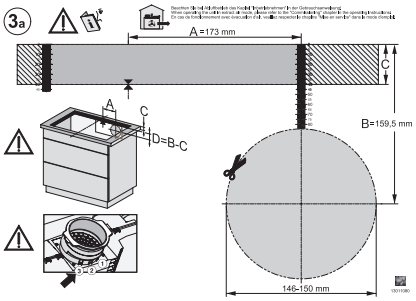

KMDA7676-1FL, KMDA7876-1FL – surface installation, 24,8 cm, drilling template

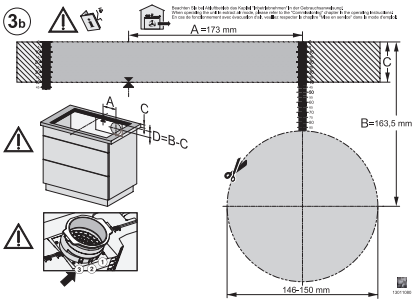

KMDA7676-1FL, KMDA7876-1FL – flush, drilling template, Installation depth 24,8 cm