KM 8895-2 FL Diamond&MSense
Induction hob with onset controls
936 mm | Full-surface | M Sense cookware voucher | DiamondFinish | Light line



- Nothing boils over, nothing burns – M Sense cookware (voucher starter set)
- Full-surface induction with elegant light line for up to 6 items of cookware
- Hard-wearing finish – DiamondFinish
- Precise settings via 6 MultiSlidesliders including intelligent networking
- A width of 936 mm for surface-mounted or flush-fit installation
- Shortest heat-up times thanks to Booster level

EAN: 4002516973133 / Material number: 12948360 /
Old Material Number: 26I88954GB

General information	
Model identifier	KM 8895-2 FL Diamond&MSense
Manufacturer material number	12948360
EAN number	4002516973133
Marketing class	Diamond
Heating type	
Heating type	Induction
Construction type	
Independent of cooker	•
Design	
Flush	•
Elegant glass ceramic surface	•
Ceramic surface colour	Graphite black
Scratch-resistant surface	DiamondFinish
Surface-mounted installation	•
Light line	•
Cooking zone details	
Number of cooking zones	1
Number of cooking areas	1
Maximum number of pans	6
1st cooking zone/cooking area	
Position	Can be selected freely
Type	Full area
Size in mm	870x380
Max. Booster power rating in W	3650
Max. rating in W	2600
User convenience	
Operation via sensor controls	MultiSlide
Miele@home	•
Con@ctivity	•
Pan and pan size recognition	•
M Sense ready	•
Display colour	White
Auto heat-up	•
Keeping warm	•
Stop & Go function	•
Recall function	•
Minute minder	•
Safety switch-off	•
Intelligent pan recognition	•
Individual setting options (e.g. buzzers)	•
Professional mode	•
Assistance programmes	•
Smart Extras	
Push notifications	•
Recipes	•
NFC pairing	•

KM 8895-2 FL Diamond&MSense
Induction hob with onset controls
936 mm | Full-surface | M Sense cookware voucher | DiamondFinish | Light line



EAN: 4002516973133 / Material number: 12948360 /
Old Material Number: 26I88954GB

Smart Extras	
RemoteUpdate	•
Smart Home Integration	•
Efficiency	
Power rating in off mode in W	0.3
Power rating in standby mode in W	0.8
Power rating in networked standby in W	2.0
Time until automatic switch to off mode in min	10
Time until automatic switch to standby in min	10
Time until automatic switch to networked standby in min	10
Cleaning and care	
Easy to clean ceramic glass	•
Wipe protection	•
Safety	
Safety switch-off	•
Lock function	•
System lock	•
Integrated cooling fan	•
Overheating protection	•
Residual heat indicator	•
Technical data	
Dimensions (H x W x D) in mm	66 x 936 x 520
Dimensions (W x D) in mm	936 x 66 x 520
Dimensions in mm (width)	936
Dimensions in mm (height)	66
Dimensions in mm (depth)	520
Cut-out dimensions (W x D) with surface-mounted installation in mm	916 mm x 500 mm
Cut-out dimensions (W x D) with flush-fit installation in mm	916/940 x 500/524
Cutout dimensions in mm (width) with surface-mounted installation	916 mm
Cutout dimensions in mm (depth) with surface-mounted installation	500 mm
Internal cutout dimensions in mm (width) with flush installation	916
Casing height incl. connection box in mm	66
Internal cutout dimensions in mm (depth) with flush installation	500
Weight in kg	26
External cutout dimensions in mm (width) with flush installation	940
External cutout dimensions in mm (depth) with flush installation	524
Total rated load in kW	9.20
Length of supply lead in m	1.5
Voltage in V	230
Frequency in Hz	50 - 60
Accessories included	
Mains cable	•

KM 8895-2 FL Diamond&MSense
Induction hob with onset controls
936 mm | Full-surface | M Sense cookware voucher | DiamondFinish | Light line



EAN: 4002516973133 / Material number: 12948360 /
Old Material Number: 26188954GB

- Voucher for M Sense starter set

KM 8895-2 FL Diamond&MSense
Induction hob with onset controls
936 mm | Full-surface | M Sense cookware voucher | DiamondFinish | Light line

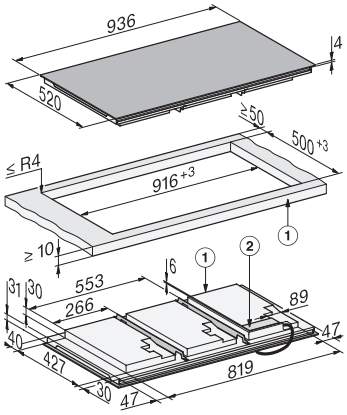

KM8895-2FL Diamond&MSense, surface-mounted (*Fußnote) Installation drawing

1) front, 2) Mains connection box, The mains connection cable (L = 1440 mm) is enclosed loose

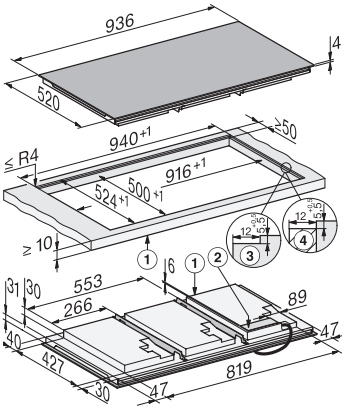

KM8895-2FL Diamond&MSense, flush (*Fußnote) (Installation drawing)

1) front, 2) Mains connection box, The mains connection cable (L = 1440 mm) is enclosed loosely, 3) Step milling natural stone worktop, 4) Wooden strip 12 mm (no supplied accessories)