CS 1212-1 I
ProLine element
with two induction-heated cooking zones



- Professional design – ceramic glass with frame measuring 288 mm 288 mm wide
- Particularly versatile – two cooking zones
- Easy and direct controls -operation via metal rotary dial control
- Broad performance spectrum – keeping warm function and TwinBooster
- Very convenient, safe – operating and residual heat indicator

EAN: 4002514998664 / Material number: 07982380 /
Old Material Number: 27121252GB

General information	
Model identifier	CS 1212-1 I
Manufacturer material number	07982380
EAN number	4002514998664
Marketing class	Gold
Heating type	
Heating type	Induction
Construction type	
ProLine	•
Design	
Elegant glass ceramic surface	•
Stainless-steel frame	•
Print design	LightPrint
Miele logo embossed in stainless steel	•
Surface-mounted installation	•
Cooking zone details	
Number of cooking zones	2
1st cooking zone/cooking area	
Position	front centre
Type	Dual-circuit ring
Size in mm	Ø 100-160
Max. rating in W	1400
Max. Booster power rating in W	2200
2nd cooking zone/cooking area	
Position	rear centre
Type	Dual-circuit ring
Size in mm	Ø 160-230
Max. rating in W	2300
Max. Booster power rating in W	3000
Max. TwinBooster power rating in W	3700
User convenience	
Pan and pan size recognition	•
Operation via knobs	•
Auto heat-up	•
Keeping warm	•
Efficiency	
Residual heat utilisation	•
Cleaning and care	
Easy to clean ceramic glass	•
Safety	
Safety switch-off	•
Lock function	•
System lock	•
Integrated cooling fan	•
Overheating protection	•
Residual heat indicator	•
Operational indicator	•

CS 1212-1 I
ProLine element
with two induction-heated cooking zones



EAN: 4002514998664 / Material number: 07982380 /
Old Material Number: 27121252GB

Technical data	
Dimensions (H x W x D) in mm	90 x 288 x 520
Dimensions in mm (width)	288
Dimensions in mm (height)	90
Dimensions in mm (depth)	520
Cut-out dimensions (W x D) with surface-mounted installation in mm	272 mm x 500 mm
Casing height incl. connection box in mm	73
Cutout dimensions in mm (width) with surface-mounted installation	272 mm
Cutout dimensions in mm (depth) with surface-mounted installation	500 mm
Weight in kg	8
Total rated load in kW	3,70
Length of supply lead in m	2,0
Voltage in V	230
Frequency in Hz	50-60
Accessories included	
Mains cable	Yes

CS 1212-1 I
ProLine element
with two induction-heated cooking zones

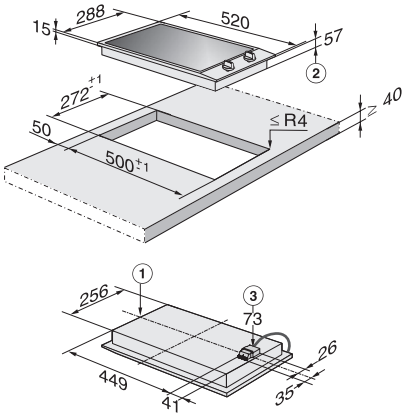

CS1212-3I, CS1212-1I (Installation drawing)

Installation note: This unit should only be installed above a built-in oven if the latter has an integrated cooling fan., Heart pacemaker: When the unit is in operation, the area immediately surrounding the unit is electromagnetically charged., Under certain conditions, this could affect the proper functioning of pacemaker: If in any doubt, please consult the manufacturer of the pacemaker or your health care professional., 1) Front, 2) Height for building in, 3) Mains connection box with cable, 2000 mm long