K 2802 Vi
MasterCool refrigerator
For high-end design and technology on a large scale.



- Push2open for convenient door-opening assistance
- Food stays fresh for up to 3 x longer thanks to MasterFresh
- Light floods the interior thanks to LED elements – BrilliantLight
- Convenient control thanks to colour touch display MasterSensor

EAN: 4002516321996 / Material number: 11503720 /
Old Material Number: 36280201EU1

| | |
|---|---|
| **General information** | |
| Model identifier | K 2802 Vi |
| Manufacturer material number | 11503720 |
| EAN number | 4002516321996 |
| Marketing class | Diamond |
| **Appliance category** | |
| Refrigerator | • |
| **Construction type** | |
| Built-in appliance | • |
| Integrated appliance | • |
| Door hinge | right |
| Convertible door hinging | • |
| Side-by-side enabled | • |
| **Design** | |
| Lighting | BrilliantLight |
| **User convenience** | |
| Networking with Miele@home | • |
| Operating concept | MasterSensor |
| SuperCool | • |
| Sabbath mode | • |
| Freshness system | MasterFresh |
| DynaCool | • |
| SoftClose | • |
| SelfClose | • |
| Push2open | • |
| FullAccess | • |
| EasyClean | • |
| MaxLoad hinge | • |
| **Control system** | |
| No. of temperature zones | 2 |
| Eco mode | • |
| **Fridge/Fridge section** | |
| Height-adjustable, full-width tempered glass shelves | 2 |
| Number of VeggieBoxes | 1 |
| No. of crisper drawers | 2 |
| SlidingShelf | • |
| Door shelves for jars | 1 |
| Door rack for bottles | 3 |
| **Efficiency** | |
| Energy efficiency class (A–G) | E |
| Annual energy consumption in kWh | 165,71 |
| Energy consumption in 24 h in kWh | 0,45 |
| **Safety** | |
| Lock function | • |
| Spill-proof glass shelves | • |
| Acoustic door alarm | • |
| Acoustic temperature alarm | • |
| Optical door alarm | • |

K 2802 Vi
MasterCool refrigerator
For high-end design and technology on a large scale.



EAN: 4002516321996 / Material number: 11503720 /
Old Material Number: 36280201EU1

| | |
|---|---|
| Optical temperature alarm | • |
| **Technical data** | |
| Niche width in mm min. | 762 |
| Niche width in mm max. | 765 |
| Niche height in mm min. | 2134 |
| Niche height in mm max. | 2164 |
| Niche depth in mm | 629 |
| Appliance width in mm | 756 |
| Appliance height in mm | 2127 |
| Appliance depth in mm | 610 |
| Weight in kg | 155,5 |
| Door hinge technology | Fixed door |
| Max. door front weight – refrigerator, in kg | 27 |
| Climate range | SN-T |
| Refrigerator compartment in l | 467 |
| including PerfectFresh zone in l | 69 |
| Total usable capacity in l | 467 |
| Acoustic airborne noise emission class (A–D) | C |
| Sound emissions in dB(A) re 1 pW | 40 |
| Current consumption (mA) | 3000 |
| Voltage in V | 220-240 |
| Fuse rating in A | 10 |
| Number of phases | 1 |
| Frequency in Hz | 50-60 |
| Length of supply lead in m | 3,0 |
| Replacing lamps | Service |
| **Accessories included** | |
| Active AirClean filter | • |
| Water filter | Nein |
| **Available display languages** | |
| Available display languages via MultiLingua | □□□□□□□, □□, □□□□, deutsch, dansk, english, english (AU), english (CA), english (GB), english (US), eesti, suomi, français, français (CA), français (FR), ελληνικά, italiano, □□□, □□□, hrvatski, latviesu, lietuviu, bahasa malaysia, nederlands, norsk, polski, português, română, русский, svenska, srpski, slovenčina, slovenščina, español, čeština, türkçe, українська, magyar |

# K 2802 Vi
## MasterCool refrigerator
## For high-end design and technology on a large scale.

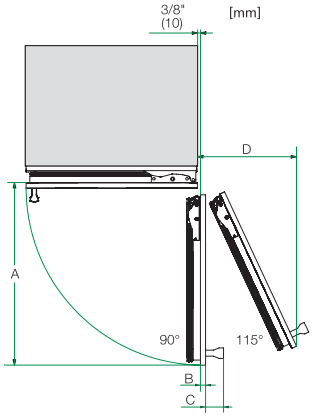


Opening angel 90°/115°, right side stop, MasterCool (Sketch) *footnote

A) Appliance door width, K 2601 Vi, K 2601 SF, KWT 2601 Vi, KWT 2601 SF, KWT 2661 ViS, KWT 2661 SFS: 677 mm (26 2/3 , inch);, K 2602 Vi, K 2602 SF, KWT 2602 Vi, KWT 2602 SF, KWT 2662 ViS, KWT 2662 SFS: 677 mm (26 2/3 , inch);, K 2801 Vi, K 2801 SF, KF 2801 Vi, KF 2801 SF: 829 mm (32 2/3 inch);, K 2802 Vi, K 2802 SF, KF 2802 Vi, KF 2802 SF: 829 mm (32 2/3 inch);, K 2901 Vi, K 2901 SF, KF 2901 Vi, KF 2901 SF: 982 mm (38 2/3 inch);, K 2902 Vi, K 2902 SF, KF 2902 Vi, KF 2902 SF: 982 mm (38 2/3 inch);, B) Furniture front (max. 38 mm) (1 1/2 inch), C) Door handle, D) Distance door to wall (without furniture front and door handle): , K 2601 Vi, K 2601 SF, KWT 2601 Vi, KWT 2601 SF, KWT 2661 ViS, KWT 2661 SFS: 296 mm (11 2/3 , inch);, K 2602 Vi, K 2602 SF, KWT 2602 Vi, KWT 2602 SF, KWT 2662 ViS, KWT 2662 SFS: 296 mm (11 2/3 , inch);, K 2801 Vi, K 2801 SF, KF 2801 Vi, KF 2801 SF: 363 mm (14 1/3 inch);, K 2802 Vi, K 2802 SF, KF 2802 Vi, KF 2802 SF: 363 mm (14 1/3 inch), K 2901 Vi, K 2901 SF, KF 2901 Vi, KF 2901 SF: 428 mm (16 7/8 inch), K 2902 Vi, K 2902 SF, KF 2902 Vi, KF 2902 SF: 428 mm (16 7/8 inch), E) ONLY valid for SF versions: A + 25 mm (1 inch)

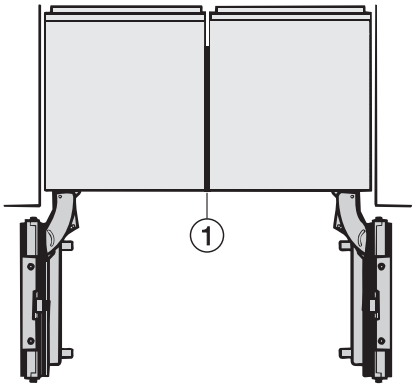


Side-by-side, MasterCool, without partition wall, with heating mat (Sketch) (with footnote)

1) Heating mat KSK 2001 (EU, AUS, CN) or KSK 2002 (US, CA, MX, BR)

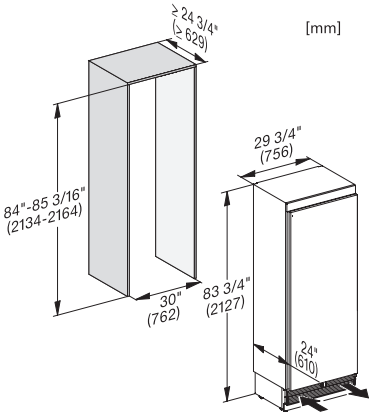


K2801Vi, K2811Vi, K2802Vi, K2812Vi, inner space, MasterCool, installation drawings

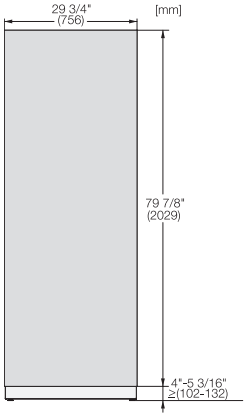


KFP3005ed/cs, KFP3004ed/cs, Front panel, Front dimensions, MasterCool II, installation drawings

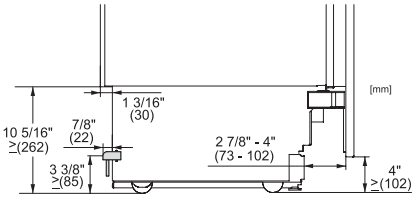


Sideview, MasterCool, Sketch

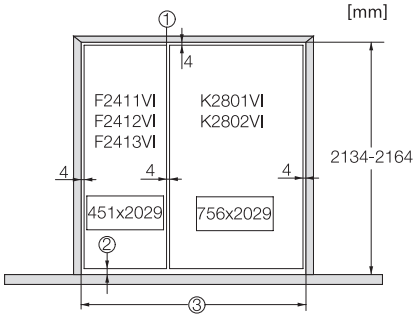


Example for diminsioning Side-by-side-Combination MasterCool (Sketch) (*footnote) (only for EUROPE)

*Niche height, 1 = Side-by-side fitting kit including pre-installed side wall heating KSK 200x, 2 = Furniture plinth height 102 - 132 mm (the appliance feet can be adjusted up to 30 mm high), 3 = Total appliance niche width 1220 mm (458 mm + 762 mm)

# K 2802 Vi
## MasterCool refrigerator
## For high-end design and technology on a large scale.

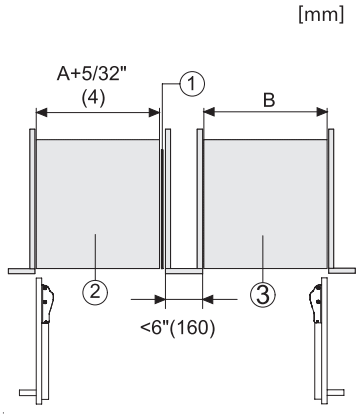


Side-by-Side, MasterCool, footnote, installation drawings

1. KSK 2001/2002, 2. Device A, 3. Device B, A = niche device A, B = niche device B

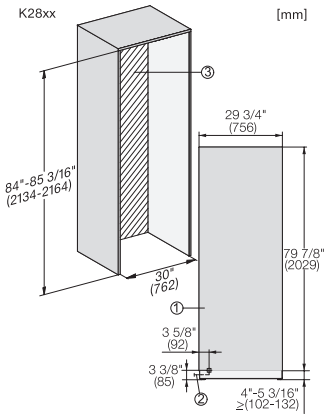


K2801Vi, K2811Vi, K2801SF, K2811SF, installation, MasterCool, *footnote, installation drawings

1. View from the front, 2. Mains connection cable, L = 3000 mm (118 inch), 3. No water/ELT connections permitted in this area

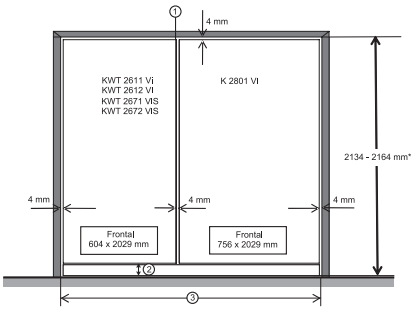


Example for diminsioning Side-by-side-Combination MasterCool (Sketch) (*footnote) (only for EUROPE)

*Niche height, 1 = Side-by-side fitting kit including pre-installed side wall heating KSK 200x, 2 = Furniture plinth height 102 - 132 mm (the appliance feet can be adjusted up to 30 mm high), 3 = Total appliance niche width 1366 mm (604 mm + 762 mm)