KM 6564 FR
Electric hob with onset controls
806 mm wide for extremely convenient cooking.

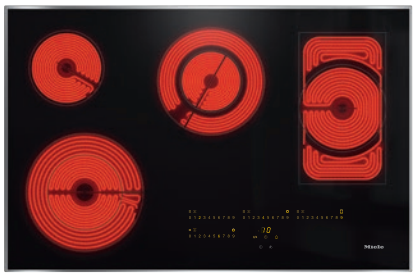

- Intuitive quick selection via number sequences – Smart Select
- Attractive design – 806 mm wide with all-round frame
- Particularly versatile – 4cooking zones incl. 1 extended/2 Vario zones
- Unbeatably fast – 1 ExtraSpeed cooking zone
- Communication with the cooker hood – automatic Con@ctivity function

EAN: 4002515996805 / Material number: 10882050 /
Old Material Number: 26656400D

General information	
Model identifier	KM 6564 FR
Manufacturer material number	10882050
EAN number	4002515996805
Marketing class	Platinum
Heating type	
Heating type	Electric
Construction type	
Independent of cooker	•
Design	
Elegant glass ceramic surface	•
Ceramic surface colour	Black
Stainless-steel frame	•
Surface-mounted installation	•
Cooking zone details	
Number of cooking zones	4
1st cooking zone/cooking area	
Position	front left
Type	ExtraSpeed
Size in mm	Ø 145 / Ø 230
Max. rating in W	1500/3200
2nd cooking zone/cooking area	
Position	rear left
Type	Single-circuit ring
Size in mm	Ø 145
Max. rating in W	1200
3rd cooking zone/cooking area	
Position	rear centre
Type	Dual-circuit ring
Size in mm	Ø 120 / Ø 210
Max. rating in W	750/2200
4th cooking zone/cooking area	
Position	rear right
Type	Casserole area
Size in mm	Ø 170 / 170x290
Max. rating in W	1500/2600
User convenience	
Networking with Miele@home	•
Con@ctivity	•
Operation via sensor controls	SmartSelect
Extended cooking zone	•
Display colour	Yellow
Stop & Go function	•
Wipe protection	•
Recall function	•
Minute minder	•
Safety switch-off	•
Auto heat-up	•

KM 6564 FR
Electric hob with onset controls
806 mm wide for extremely convenient cooking.

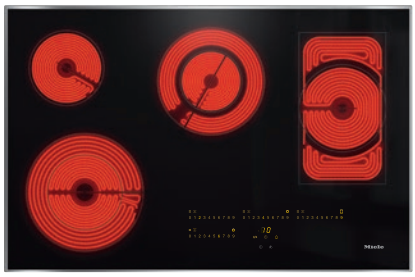

EAN: 4002515996805 / Material number: 10882050 /
Old Material Number: 26656400D

Keeping warm	•
Individual setting options (e.g. buzzers)	•
Efficiency	
Residual heat utilisation	•
Power rating in off mode in W	0,5
Power rating in standby mode in W	0,8
Power rating in networked standby in W	2,0
Time until automatic switch to off mode in min	10
Time until automatic switch to standby in min	10
Time until automatic switch to networked standby in min	10
Cleaning and care	
Easy to clean ceramic glass	•
Safety	
Safety switch-off	•
Lock function	•
System lock	•
Overheating protection	•
Residual heat indicator	•
Technical data	
Dimensions (H x W x D) in mm	50 x 806 x 526
Dimensions in mm (width)	806
Dimensions in mm (height)	50
Dimensions in mm (depth)	526
Casing height incl. connection box in mm	43
Cutout dimensions in mm (width) with surface-mounted installation	780 mm
Cutout dimensions in mm (depth) with surface-mounted installation	500 mm
Weight in kg	12
Total rated load in kW	9,20
Length of supply lead in m	1,4
Voltage in V	230
Frequency in Hz	50-60
Accessories included	
Razor-blade scraper	•
Mains cable	Yes

KM 6564 FR
Electric hob with onset controls
806 mm wide for extremely convenient cooking.

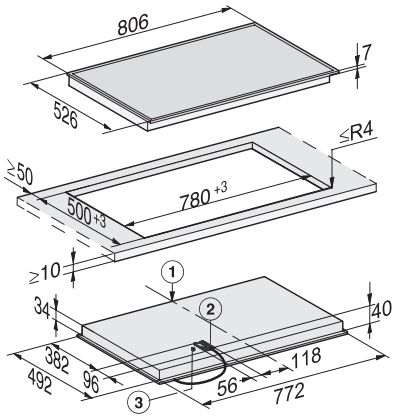

KM 6565 FR (Installation drawing)

1) Front, 2) Mains connection box, built-in height 40 mm. Mains connection cable L = 1440 mm, 3) Connection WLAN stick