# DG 2840
Built-in steam oven
for healthy cooking with automatic programmes.



- 7-segment display with sensor controls – EasySensor
- Perfect results – DualSteam technology
- Perfect results guaranteed every time – Automatic programmes
- Easy preparation of a complete meal – menu cooking
- Plenty of room – 40 l stainless steel oven compartment

EAN: 4002516156635 / Material number: 11094400 /
Old Material Number: 23284040GB

| | |
|---|---|
| **General information** | |
| Model identifier | DG 2840 |
| Manufacturer material number | 11094400 |
| EAN number | 4002516156635 |
| Marketing class | Silver |
| **Construction type and design** | |
| PureLine | • |
| **Construction type and design** | |
| Built-in steam oven | • |
| Colour | Stainless steel/Clean Steel |
| **Convenience features** | |
| External steam generation | • |
| Menu cooking without transfer of taste | • |
| Automatic programmes with ability to make individual adjustments | • |
| **Operating modes** | |
| Steam cooking | • |
| Eco steam cooking | • |
| Defrosting | • |
| Reheat | • |
| Automatic programmes | • |
| **User convenience** | |
| Display | EasySensor |
| SoftOpen | • |
| SoftClose | • |
| Quantity-independent cooking | • |
| Steam cooking on up to 3 levels at the same time | • |
| Menu cooking | • |
| Steam reduction before end of programme | • |
| Programmable cooking duration | • |
| Actual temperature display | • |
| Individual settings | • |
| **Efficiency** | |
| Power rating in off mode in W | 0,3 |
| Power rating in standby mode in W | 0,8 |
| Power rating in networked standby in W | 2,0 |
| Time until automatic switch to standby in min | 20 |
| Time until automatic switch to networked standby in min | 20 |
| Time until automatic switch to off mode in min | 20 |
| **Cleaning and care** | |
| Stainless steel/CleanSteel finish | • |
| Stainless-steel oven compartment with linen structure | • |
| External steam generator | • |
| Floor heater for condensate reduction | • |
| Quick-release side racks | • |
| Removable stainless-steel side racks | • |
| Descaling | • |
| CleanGlass door | • |

DG 2840
Built-in steam oven
for healthy cooking with automatic programmes.




EAN: 4002516156635 / Material number: 11094400 /
Old Material Number: 23284040GB

| | |
|---|---|
| **Steam techn./water supply** | |
| DualSteam | • |
| Fresh water container volume in l | 1,5 |
| Removal of fresh water container with Push2release | • |
| DirectWater | No |
| **Safety** | |
| Appliance cooling system and touch-cool front | • |
| Safety switch-off | • |
| Vapour cooling system | • |
| **Technical data** | |
| Oven compartment volume in l | 40 |
| No. of shelf levels | 4 |
| Door hinge | Bottom |
| Steam-cooking mode temperatures min. in °C | 40 |
| Steam-cooking mode temperatures max. in °C | 100 |
| Niche width min. in mm | 560 |
| Niche width max. in mm | 568 |
| Niche height min. in mm | 450 |
| Niche height max. in mm | 452 |
| Niche depth in mm | 550 |
| Appliance dimensions (W x H x D) in mm | 595 x 455 x 569 |
| Weight in kg | 26,8 |
| Total rated load in kW | 3,60 |
| Voltage in V | 230 |
| Frequency in Hz | 50-60 |
| Fuse rating in A | 16 |
| Number of phases | 1 |
| Mains cable with plug | • |
| Length of supply lead in m | 2 |
| **Accessories included** | |
| Removable side runners (pair) | 1 |
| No. of perforated stainless-steel cooking container | 2 |
| Solid stainless steel cooking containers DGG 50 40 | 1 |
| Wire rack | 1 |
| Drip tray DGG 100 40 | 1 |
| Descaling tablets | 2 |

# DG 2840
## Built-in steam oven
## for healthy cooking with automatic programmes.

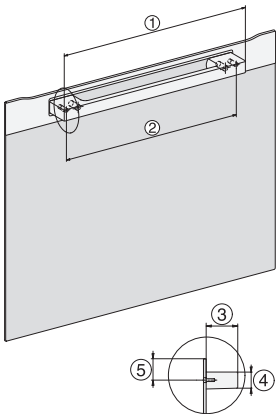


H7000 handle, installation drawing

1) 400 mm, 2) 360 mm, 3) 47 mm, 4) 24 mm, 5) 32.5 mm

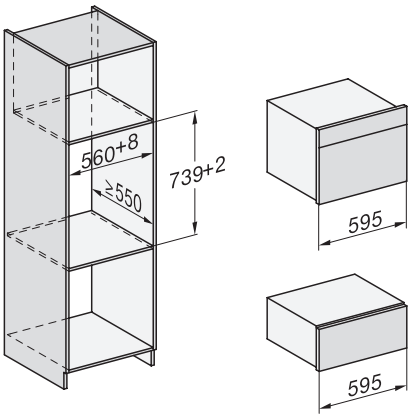


Installation DG, DGM, DGC XL, ESW7x20 installation drawings

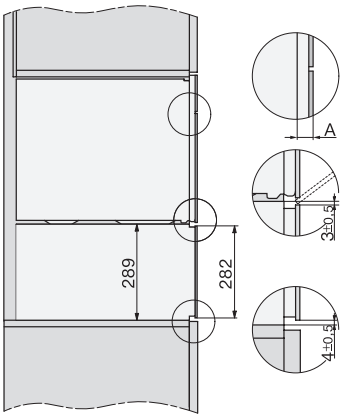


side view, DG, DGM, ESW7x20 installation drawings

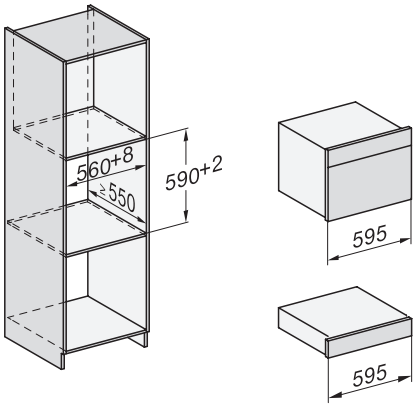


Installation_DG_DGM_DGC_XL_ESW7x10_EVS7010, installation drawings

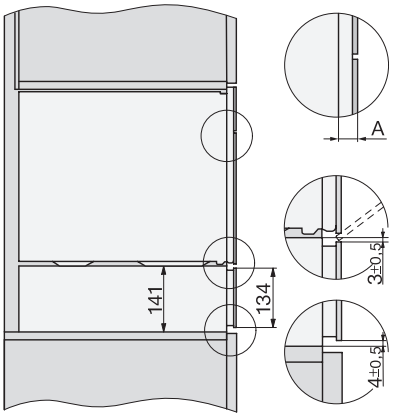


Side view_DG_DGM_ESW7x10_EVS7010 installation drawings

A) 22 mm glass, 23,3 mm stainless steel

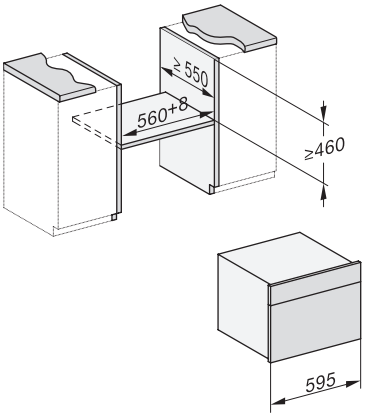


built-in DG DGM DGC XL build-under, installation drawing

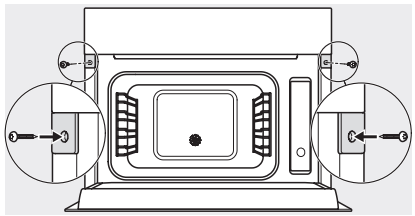

Screw joint DG DGM, installation drawing

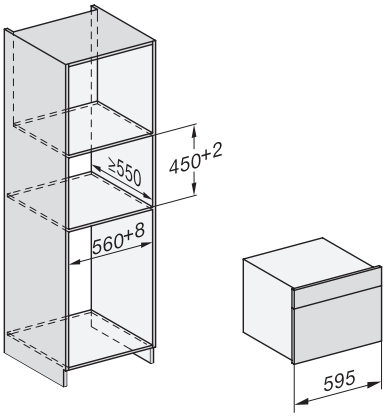


DG DGM, installation drawing

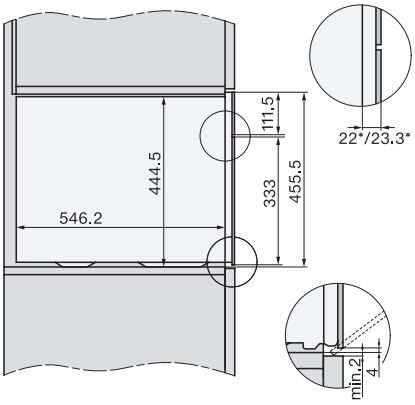


side view DG DGM, installation drawing, GB, AU

22 mm glass, 23,3 mm stainless steel

DG 2840
Built-in steam oven
for healthy cooking with automatic programmes.

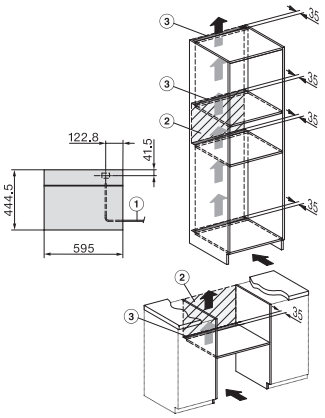


installation DG, installation drawing, GB, AU

1) Mains connection cable, L=2000 mm, 2) No connection in this area, 3) Ventilation cutout min. 180 cm²