CVA 7845

Built-in coffee machine with DirectWater

Perfectly combinable design with CoffeeSelect + AutoDescale for highest demands.



- Large touch display with movement sensor – M Touch + MotionReact
- Individual coffee enjoyment with 3 bean containers – CoffeeSelect
- Perfect care – fully automatic with AutoDescale and AutoClean
- Perfectly positioned: thanks to the patented CupSensor
- Two coffees at once at the touch of a button – OneTouch for Two

EAN: 4002516825173 / Material number: 12642260 /
Old Material Number: 29784550GBX

General information	
Model identifier	CVA 7845
Manufacturer material number	12642260
EAN number	4002516825173
Marketing class	Diamond
Construction type and design	
Built-in bean-to-cup coffee machine	•
VitroLine	•
ArtLine	•
Construction type and design	
Colour	Pearl beige
Convenience features	
AromaticSystemFresh	•
CoffeeSelect	•
OneTouch preparation	•
OneTouch for Two preparation	•
DoubleShot	•
Programmable User profiles	10
Conical grinder to preserve the taste	•
Selectable grinder setting	•
Programmable amount of coffee	•
Programmable amount of water	•
Programmable water temperature	•
Amount of milk can be programmed	•
Programmable amount of milk froth	•
Pre-brewing programmable	•
TeaTimer	•
User convenience	
Networking with Miele@home	•
Display	M Touch
MotionReact: light comes on when movement is detected	•
MotionReact: display comes on when movement is detected	•
CupSensor	•
PerformanceMode	•
EasyClick milk container	•
DirectWater	•
ComfortDoor	•
Concealed door handle	•
BrilliantLight	•
Brew unit lighting	•
Expert mode	•
MultiLingua	•
MyMiele	•
Help function	•
No. of bean types	3
No. of bean containers	3
Capacity of bean container A in g	150

CVA 7845
Built-in coffee machine with DirectWater
Perfectly combinable design with CoffeeSelect + AutoDescale for highest demands.



EAN: 4002516825173 / Material number: 12642260 /
Old Material Number: 29784550GBX

Capacity of bean container B in g	300
Capacity of bean container C in g	150
Bean container capacity, total in g	600
Removable bean container	•
Capacity of water container in l	2,7
Milk container capacity in l	0,7
Capacity of waste container in capsules	17
Drip tray capacity	1,6
Easily accessible containers	•
Time of day display	•
Clock synchronisation	•
Date display	•
Programmable switch-on time	•
Programmable switch-off time	•
Programmable standby time	•
Programmable settings	•
Drink specialities	
Selectable beverage portion size in ml	20-300
Ristretto, single	•
Ristretto, double	•
Espresso, single	•
Espresso, double	•
Coffee, single	•
Coffee, double	•
Long coffee, single	•
Long coffee, double	•
Cappuccino, single	•
Hot milk, single	•
Latte macchiato, double	•
Milk froth, single	•
Milk froth, double	•
Espresso macchiato, single	•
Espresso macchiato, double	•
Cappuccino italiano, single	•
Cappuccino italiano, double	•
Flat white, single	•
Flat white, double	•
Café au lait, single	•
Café au lait, double	•
Caffè latte, single	•
Caffè latte, double	•
Caffè americano, single	•
Caffè Americano, double	•
Long black, single	•
Long black, double	•
Warm water, single	•
Warm water, double	•
Hot water, single	•

CVA 7845
Built-in coffee machine with DirectWater
Perfectly combinable design with CoffeeSelect + AutoDescale for highest demands.

EAN: 4002516825173 / Material number: 12642260 /
Old Material Number: 29784550GBX

Hot water, double	•
Black tea, single	•
Black tea, double	•
Herbal tea, single	•
Herbal tea, double	•
Fruit tea, single	•
Fruit tea, double	•
Green tea, single	•
Green tea, double	•
White tea, single	•
White tea, double	•
Japanese tea, single	•
Japanese tea, double	•
Chai latte, single	•
Chai latte, double	•
Coffee pot	•
Teapot	•
Cappuccino, double	•
Latte macchiato, double	•
Latte macchiato, single	•
Efficiency	
Energy-saving eco-mode selectable	•
Power rating in standby mode in W	<=0,3
Power rating in networked standby in W	<=2,0
Time until automatic switch to off mode in min	20
Time until automatic switch to standby in min	20
Time until automatic switch to networked standby in min	20
Cleaning and care	
AutoDescale function	•
Manual descaling	•
AutoClean	•
Automatic rinsing of milk pipework with water from the water container	•
Convenient cleaning programmes	•
Automatic rinsing function	•
ComfortClean	•
Removable milk pipework	•
Removable brew unit	•
Programmable water hardness	•
Safety	
System lock	•
Technical data	
Min niche width in mm	560
Max niche width in mm	568
Min niche height in mm	450
Max niche height in mm	452
Niche depth in mm	550
Height-adjustable serving spout in cm	16,5
Height-adjustable serving spout in cm	4,0

CVA 7845
Built-in coffee machine with DirectWater
Perfectly combinable design with CoffeeSelect + AutoDescale for highest demands.



EAN: 4002516825173 / Material number: 12642260 /
Old Material Number: 29784550GBX

Appliance width in mm	595
Appliance height in mm	455
Appliance depth in mm	475
Depth with door open in cm	108,0
Total rated load in kW	1,45
Voltage in V	220-240
Fuse rating in A	13
Number of phases	1
Length of water inlet hose in m	1,5
Length of supply lead in m	2,0
Accessories included	
Milk container made of glass	•
Available display languages	
Available display languages via MultiLingua	□□□□□□□, □□, □□□□, deutsch, dansk, english, english (AU), english (CA), english (GB), english (US), suomi, français, français (CA), français (FR), ελληνικά, italiano, □□□, □□□, hrvatski, bahasa malaysia, nederlands, norsk, polski, português, română, русский, svenska, srpski, slovenčina, slovenščina, español, čeština, türkçe, українська, magyar

CVA 7845

Built-in coffee machine with DirectWater

Perfectly combinable design with CoffeeSelect + AutoDescale for highest demands.

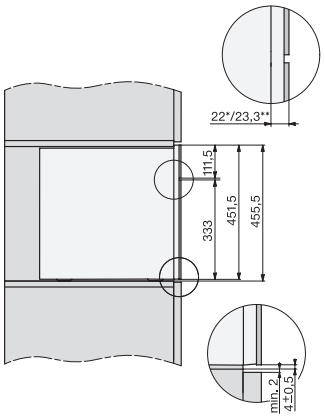

CVA7000, side view (*footnote) (installation drawing)

22 mm – Glass, 23,3 mm – Cleansteel

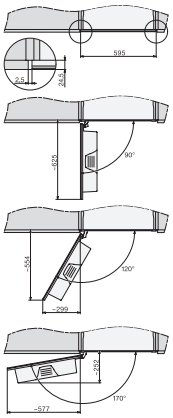

CVA7000, top view (installation drawings)

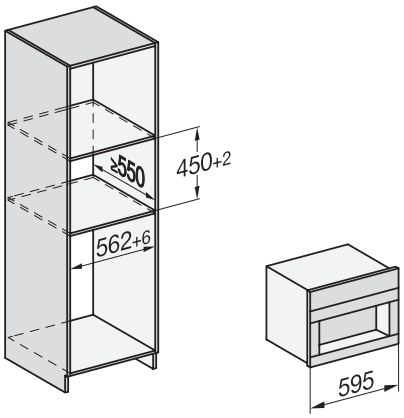

CVA7000, Built-in larder unit for appliances with fresh water connection (built in)

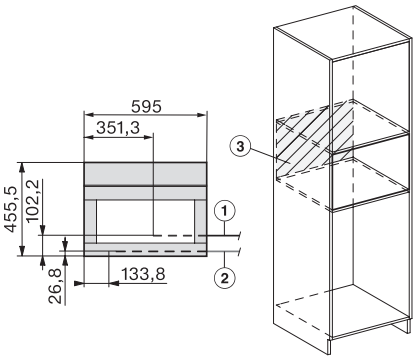

CVA7000, installation (installation drawings)

1) Mains Connection cable, L=2.000 mm, 2) Water inlet hose , L=2.000 mm, 3) No Connection in this area