# DGC 7840 HCX Pro

Handleless compact combination steam oven
for steam cooking, baking, roasting with wireless food probe + HydroClean.




- Large touch display with proximity sensor – M Touch + MotionReact
- Perfect results – DualSteam technology
- Crispy outside, succulent inside – combination cooking
- Miele@home – network-enabled WiFi appliance + Mix & Match
- Easy cleaning – HydroClean and stainless steel oven compartment

EAN: 4002516632429 / Material number: 12100640 / Old Material Number: 23784068D

| **General information** | |
|---|---|
| Model identifier | DGC 7840 HCX Pro |
| Manufacturer material number | 12100640 |
| EAN number | 4002516632429 |
| Marketing class | Diamond |
| **Construction type and design** | |
| ArtLine | • |
| Handleless | • |
| **Construction type and design** | |
| Steam combination oven | • |
| Colour | Obsidian black |
| **Convenience features** | |
| Rapid heat-up | • |
| Pre-heating | • |
| External steam generation | • |
| Oxygen sensor | • |
| Individual humidity settings in combination cooking | • |
| Menu cooking without transfer of taste | • |
| Mix & Match | • |
| Food probe | Without cable |
| Automatic programmes with ability to make individual adjustments | • |
| Keeping warm | • |
| Crisp function | • |
| **Operating modes** | |
| Fan plus | • |
| Conventional heat | • |
| Steam cooking | • |
| Combination cooking | • |
| Combination cooking with Fan plus | • |
| Combination cooking with Conventional heat | • |
| Combination cooking with grill large | • |
| Sous-vide | • |
| Intensive bake | • |
| Fan grill | • |
| Grill | • |
| Economy grill | • |
| Top heat | • |
| Bottom heat | • |
| Cake plus | • |
| Eco hot air | • |
| Eco steam cooking | • |
| Defrost | • |
| Roast with moisture | • |
| Reheat | • |
| Plate warming | • |
| Automatic programmes | • |
| Country-specific automatic programmes | • |

DGC 7840 HCX Pro
Handleless compact combination steam oven
for steam cooking, baking, roasting with wireless food probe + HydroClean.




EAN: 4002516632429 / Material number: 12100640 / Old Material Number: 23784068D

| | |
|---|---|
| Special applications | • |
| **User convenience** | |
| Networking with Miele@home | • |
| Display | M Touch |
| MotionReact proximity sensor | • |
| SoftOpen | • |
| Touch2Open | • |
| MultiLingua | • |
| MyMiele | • |
| Help function | • |
| Motorised lift-up control panel with SoftClose | • |
| Quantity-independent cooking | • |
| Steam cooking on up to 3 levels at the same time | • |
| Automatic menu cooking | • |
| Steam reduction before end of programme | • |
| Polyphonic buzzers | • |
| Time of day display | • |
| Date display | • |
| Minute minder | • |
| Programmable start of cooking duration | • |
| Programmable end of cooking duration | • |
| Programmable cooking duration | • |
| Actual temperature display | • |
| Target temperature display | • |
| Buzzer when desired temperature is reached | • |
| Recommended temperature | • |
| User programmes | • |
| Individual settings | • |
| **Efficiency** | |
| Energy efficiency class (A+++ – D) | A+ |
| Power rating in off mode in W | 0,3 |
| Power rating in standby mode in W | 0,8 |
| Power rating in networked standby in W | 2,0 |
| Time until automatic switch to standby in min | 20 |
| Time until automatic switch to networked standby in min | 20 |
| Time until automatic switch to off mode in min | 20 |
| **Cleaning and care** | |
| Stainless-steel oven compartment with linen structure | • |
| Hinged grill element | • |
| External steam generator | • |
| HydroClean | • |
| Soak programme | • |
| Rinse programme | • |
| Oven compartment drying programme | • |
| Quick-release side racks | • |
| Removable stainless-steel side racks | • |
| Automatic descaling | • |
| CleanGlass door | • |

DGC 7840 HCX Pro
Handleless compact combination steam oven
for steam cooking, baking, roasting with wireless food probe + HydroClean.

EAN: 4002516632429 / Material number: 12100640 / Old Material Number: 23784068D

| | |
|---|---|
| **Steam techn./water supply** | |
| DualSteam | • |
| Steam generator power in kW | 3,30 |
| Fresh water container volume in l | 1,4 |
| Fresh water container behind motorised control panel | • |
| Condensate container behind motorised lift-up control panel with SoftClose | • |
| DirectWater | No |
| Drain filter | • |
| **Safety** | |
| Appliance cooling system and touch-cool front | • |
| Safety switch-off | • |
| System lock | • |
| Vapour cooling system | • |
| Sensor lock | • |
| **Technical data** | |
| Oven compartment volume in l | 47 |
| No. of shelf levels | 3 |
| Numbered shelf levels | • |
| Door hinge | Bottom |
| Oven light | BrilliantLight |
| Oven mode temperatures min. in °C | 30 |
| Oven mode temperatures max. in °C | 230 |
| Steam-cooking mode temperatures min. in °C | 40 |
| Steam-cooking mode temperatures max. in °C | 100 |
| Niche width min. in mm | 560 |
| Niche width max. in mm | 568 |
| Niche height min. in mm | 450 |
| Niche height max. in mm | 452 |
| Niche depth in mm | 550 |
| Appliance dimensions (W x H x D) in mm | 595 x 456 x 569 |
| Weight in kg | 40,2 |
| Total rated load in kW | 3,40 |
| Voltage in V | 230 |
| Frequency in Hz | 50 |
| Fuse rating in A | 16 |
| Number of phases | 1 |
| Mains cable with plug | • |
| Length of supply lead in m | 2 |
| Replacing lamps | Service |
| **Accessories included** | |
| Universal tray with PerfectClean HUBB 71 | 1 |
| Baking and roasting rack with PerfectClean HBBR 71 | 1 |
| PerfectClean FlexiClip runners HFC 71 (pair) | 1 |
| Wireless food probe | 1 |
| Removable side runners (pair) | 1 |
| Perforated stainless-steel cooking containers | 2 |
| Solid stainless steel cooking containers | 1 |
| HydroClean cleaning agent | 1 |

DGC 7840 HCX Pro
Handleless compact combination steam oven
for steam cooking, baking, roasting with wireless food probe + HydroClean.




EAN: 4002516632429 / Material number: 12100640 / Old Material Number: 23784068D

| | |
|---|---|
| Descaling tablets | 2 |
| **Available display languages** | |
| Available display languages via MultiLingua | □□□□□□□, □□, □□□□, deutsch, dansk, english, suomi, français, ελληνικά, italiano, □□□, □□□, hrvatski, bahasa malaysia, nederlands, norsk, polski, português, română, русский, svenska, srpski, slovenčina, slovenščina, español, čeština, türkçe, українська, magyar |

# DGC 7840 HCX Pro

## Handleless compact combination steam oven
## for steam cooking, baking, roasting with wireless food probe + HydroClean.

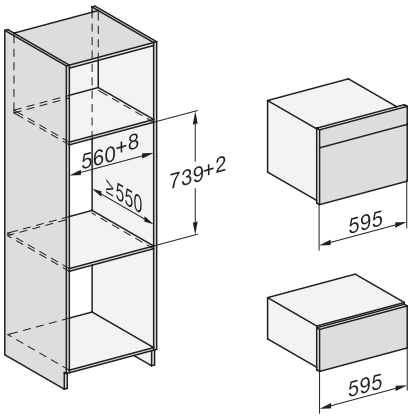


Installation DG, DGM, DGC XL, ESW7x20 installation drawings

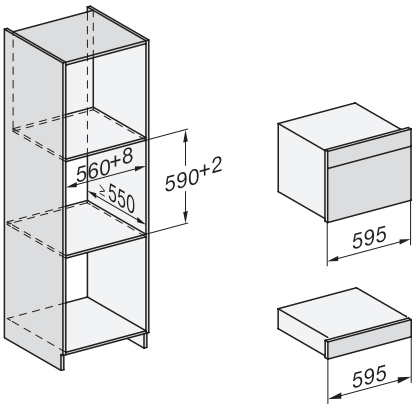


Installation_DG_DGM_DGC_XL_ESW7x10_EVS7010, installation drawings

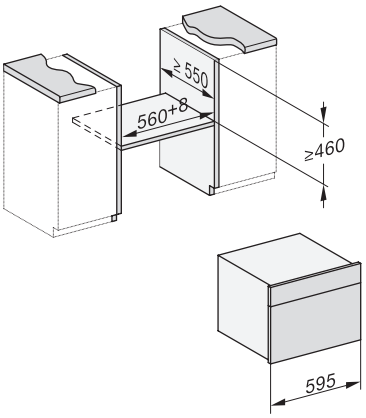


built-in DG DGM DGC XL build-under, installation drawing

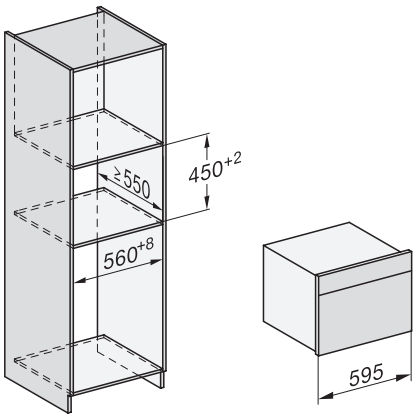


DGC7x4x built-in tall cabinet, installation drawing

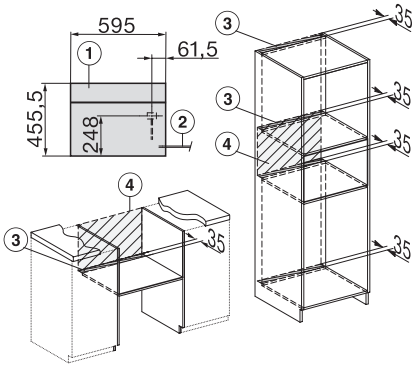


DGC7x40 connections and ventilation 45cm, installation drawing

1) Front view, 2) Mains connection cable, L=2.000 mm, 3) Ventilation cut min. 180 cm², 4) No connection in this area

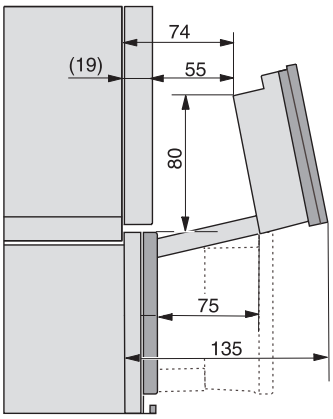


DGC7x4x swivel range of the aperture, installation drawings

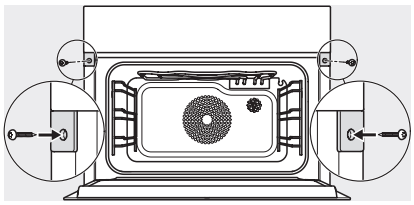

screw joint DGC XL, installation drawing

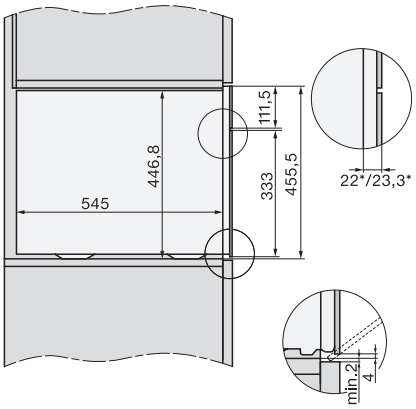


side view DGC XL, installation drawings

A) 22 mm glass, 23,3 mm stainless steel