CS 7641 FL
SmartLine element
with induction wok



- Intuitive quick selection via number sequences – Smart Select
- Elegant design – for flush or raised installation
- Seamlessly integrates with any SmartLine element
- Eye-catcher – with integrated wok
- No overheating – the wok pan included keeps the temperature stable at 250 °C

EAN: 4002516276210 / Material number: 11323040 /
Old Material Number: 27764150GB

General information	
Model identifier	CS 7641 FL
Manufacturer material number	11323040
EAN number	4002516276210
Marketing class	Platinum
Heating type	
Heating type	Induction
Construction type	
SmartLine	•
Design	
Elegant glass ceramic surface	•
Ceramic surface colour	Black
Flush	•
Surface-mounted installation	•
Appliance networking	•
Cooking zone details	
Number of cooking zones	1
1st cooking zone/cooking area	
Position	Centred
Type	Wok burner
Size in mm	Ø 300
Max. rating in W	2500
Max. Booster power rating in W	3000
6th cooking zone/cooking area	
Wok recess	Wok recess
User convenience	
Pan and pan size recognition	•
Operation via sensor controls	SmartSelect
Display colour	Yellow
Permanent pan recognition	•
Stop & Go function	•
Wipe protection	•
Recall function	•
Minute minder	•
Auto heat-up	•
Keeping warm	•
Individual setting options (e.g. buzzers)	•
Cleaning and care	
Easy to clean ceramic glass	•
Safety	
Safety switch-off	•
Lock function	•
System lock	•
Integrated cooling fan	•
Overheating protection	•
Residual heat indicator	•
Technical data	
Dimensions (H x W x D) in mm	134 x 378 x 520

CS 7641 FL
SmartLine element
with induction wok



EAN: 4002516276210 / Material number: 11323040 /
Old Material Number: 27764150GB

Dimensions in mm (width)	378
Dimensions in mm (height)	134
Dimensions in mm (depth)	520
Cut-out dimensions (W x D) with flush-fit installation in mm	358/382 x 500/524
Casing height incl. connection box in mm	129
Cutout dimensions in mm (width) with surface-mounted installation	358 mm
Cutout dimensions in mm (depth) with surface-mounted installation	500 mm
Internal cutout dimensions in mm (width) with flush installation	358
Internal cutout dimensions in mm (depth) with flush installation	500
Weight in kg	12
External cutout dimensions in mm (width) with flush installation	382
External cutout dimensions in mm (depth) with flush installation	524
Total rated load in kW	3,00
Length of supply lead in m	1,5
Voltage in V	220-240
Frequency in Hz	50-60
Accessories included	
Mains cable	Yes
Coated wok pan	•

CS 7641 FL
SmartLine element with induction wok

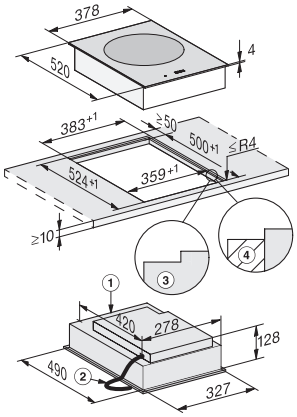

CS7641FL, flush (*Fußnote) (Installation drawing)

1) Front, 2) Mains connection cable, L = 2000 mm, 3) Stepped cut-out, 4) Wooden frame 12 mm (supplied loose)

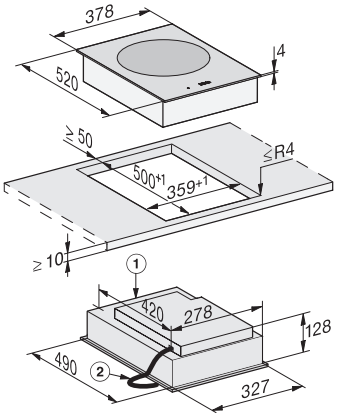

CS7641FL, onset (Installation drawing)

1) Front, 2) Mains connection cable, L = 2000 mm

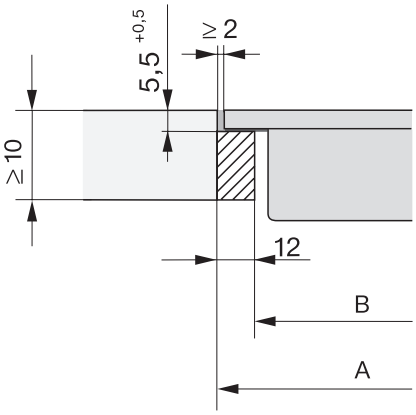

CS 7000 FL, flush (Installation drawing)

*7+0,5 = CS7641 (Wok)

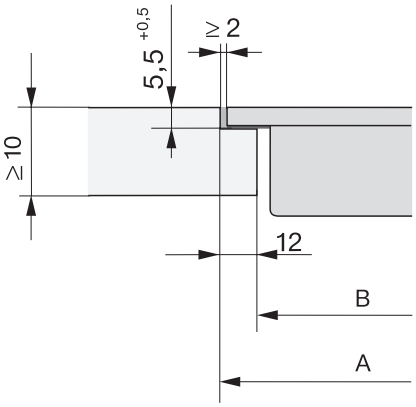

CS 7000 FL, flush (Installation drawing)

*7+0,5 = CS7641 (Wok)