ESW 7010

14 cm high gourmet warming drawer without handle
for preheating crockery, keeping food warm and low temperature cooking.



- The ultimate in enjoyment – low temperature cooking
- Always at the right temperature – 4 functions
- Convenient and easy – Touch control
- Opening the drawer couldn't be easier – Push2open
- Better safe than sorry – timer function with automatic switch-off

EAN: 4002516169895 / Material number: 11093260 /
Old Material Number: 30701020GB

General information	
Model identifier	ESW 7010
Manufacturer material number	11093260
EAN number	4002516169895
Construction type and design	
PureLine	•
VitroLine	•
ArtLine	•
Handleless	•
Construction type and design	
Gourmet warming drawer	•
Colour	Obsidian black
Operating modes	
Cup warming	•
Plate warming	•
Convenience features	
Pre-heating crockery	•
Keeping food warm	•
Perfect cooking results at low temperature	•
Operating modes	
Keeping food warm	•
Low temperature cooking	•
User convenience	
Miele@home	•
Control panel with sensor controls	•
Fully telescopic runners for easy loading and unloading of the warming drawer	•
Control panel with symbols	•
Push2open mechanism	•
Stop programming	•
Timer function	•
Sabbath programme	•
Efficiency	
Power rating in off mode in W	0,3
Power rating in standby mode in W	0,8
Power rating in networked standby in W	2,0
Time until automatic switch to off mode in min	20
Time until automatic switch to standby in min	20
Time until automatic switch to networked standby in min	20
Cleaning and care	
Flush control panel	•
Safety	
Cool front	•
Anti-slip mat	•
Safety switch-off	•
Accessory drawer	
Capacity	6 place settings

ESW 7010

14 cm high gourmet warming drawer without handle
for preheating crockery, keeping food warm and low temperature cooking.



EAN: 4002516169895 / Material number: 11093260 /
Old Material Number: 30701020GB

Technical data	
Temperatures min. in °C	40
Temperatures max. in °C	85
Appliance width in mm	595
Appliance height in mm	141
Appliance depth in mm	570
Useable interior height in mm	80
Total rated load in kW	0,70
Voltage in V	230
Frequency in Hz	50-60
Fuse rating in A	10
Number of phases	1
Mains cable with plug	•
Length of supply lead in m	2,0
Accessories included	
Anti-slip mat	1

ESW 7010

14 cm high gourmet warming drawer without handle
for preheating crockery, keeping food warm and low temperature cooking.

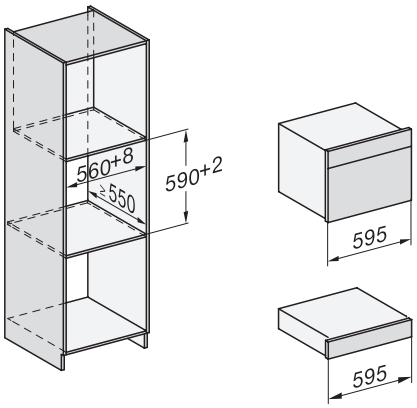

Installation_DG_DGM_DGC_XL_ESW7x10_EVS7010, installation drawings

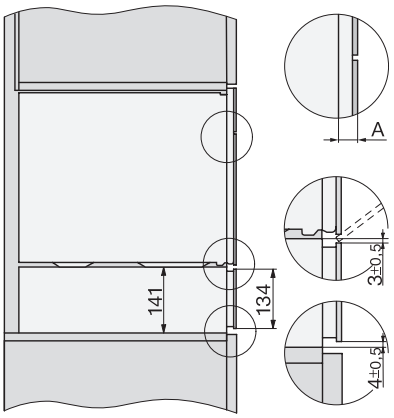

Side view_DG_DGM_ESW7x10_EVS7010 installation drawings

A) 22 mm glass, 23,3 mm stainless steel

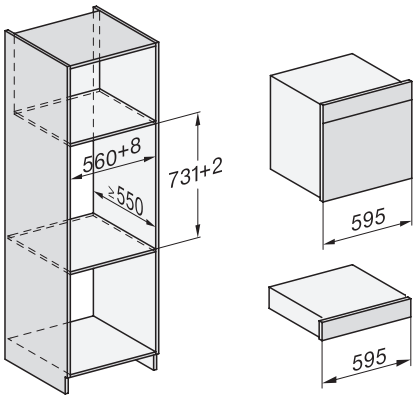

Installation_DGC_XXL_ESW7x10_EVS7010 installation drawings

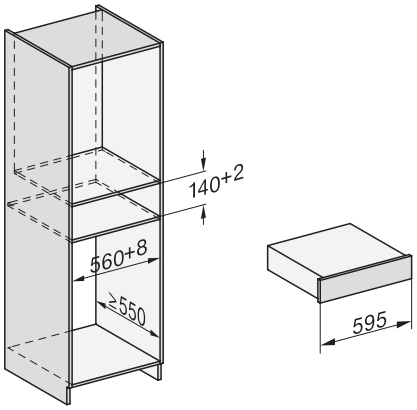

built-in ESW7x10 EVS7010, installation drawing

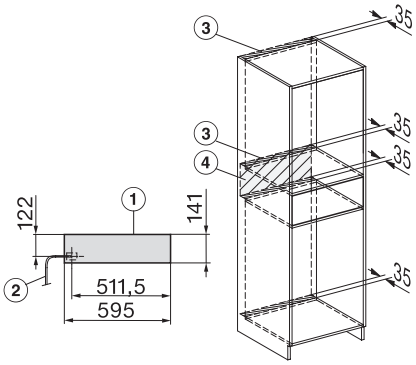

Installation ESW7x10, installation drawing, AU, GB

1) Front view, 2) Mains connection cable, L=2.000 mm, 3) Ventilation cut min. 180 cm², 4) No connection in this area

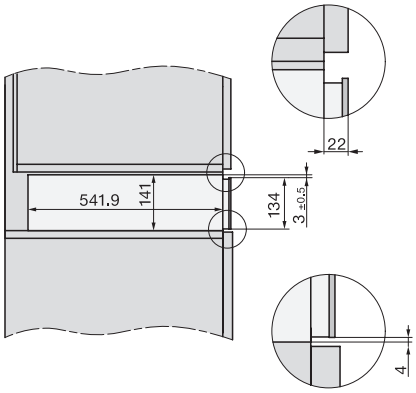

side view ESW7x10 EVS7010, installation drawing, GB, AU

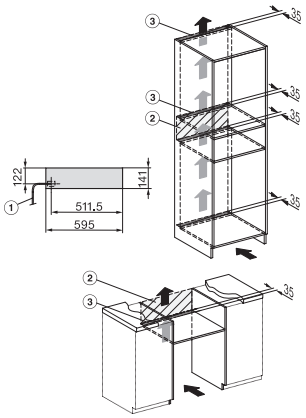

ESW7010, ESW7110 - installation drawing – Installation – GB, AU

1) Front view, 2) Mains connection cable, L=2,000 mm, 3) ventilation cut-out min. 180 cm², 4) no connection in this area