Miele

H 2851 B
Oven
in a mix and match design with networking and PerfectClean.



- Clear text display with rotary controls – EasyControl Plus
- Particularly easy to clean – PerfectClean finish
- Network-enabled WiFi appliance – Miele@home
- Achieve perfect results with ease – automatic programmes
- For everything that is crunchy and crisp – AirFry operating mode

EAN: 4002516642831 / Material number: 12143940 /
Old Material Number: 22285144GB

General information	
Model identifier	H 2851 B
Manufacturer material number	12143940
EAN number	4002516642831
Marketing class	Silver
Construction type and design	
PureLine	•
Construction type and design	
Built-in oven	•
Colour	Stainless steel/Clean Steel
Convenience features	
Rapid heat-up	•
Operating modes	
Fan plus	•
Intensive bake	•
Conventional heat	•
Bottom heat	•
Fan grill	•
AirFry	•
Grill	•
Eco hot air	•
Automatic programmes	•
User convenience	
Networking with Miele@home	•
Display	EasyControl Plus
SoftOpen	•
SoftClose	•
MultiLingua	•
Time of day display	•
Minute minder	•
Programmable start of cooking duration	•
Programmable end of cooking duration	•
Programmable cooking duration	•
Actual temperature display	•
Target temperature display	•
Buzzer when desired temperature is reached	•
Recommended temperature	•
Individual settings	•
Efficiency	
Energy efficiency class (A+++ – D)	A+
Power rating in off mode in W	0,3
Power rating in standby mode in W	0,8
Power rating in networked standby in W	2,0
Time until automatic switch to standby in min	20
Time until automatic switch to networked standby in min	20
Time until automatic switch to off mode in min	20
Cleaning and care	
Stainless steel/CleanSteel finish	•

H 2851 B
Oven
in a mix and match design with networking and PerfectClean.



EAN: 4002516642831 / Material number: 12143940 /
Old Material Number: 22285144GB

Oven compartment with PerfectClean and catalytically enamelled liners	•
CleanGlass door	•
Safety	
Appliance cooling system and touch-cool front	•
Safety switch-off	•
System lock	•
Technical data	
Oven compartment volume in l	76
No. of shelf levels	5
Numbered shelf levels	•
Oven light	1 halogen spot
Plug type	3 pole without plug
Niche width min. in mm	560
Niche width max. in mm	568
Niche height min. in mm	590
Niche height max. in mm	595
Niche depth in mm	550
Weight in kg	42,0
Total rated load in kW	3,50
Length of supply lead in m	1,50
Voltage in V	220-240
Frequency in Hz	50
Fuse rating in A	16
Number of phases	1
Replacing lamps	Customer
Accessories included	
Universal tray with PerfectClean HUBB 71	1
Baking and roasting rack without PerfectClean	1
Removable side runners (pair)	1
Grilling and roasting insert with PerfectClean	1
Available display languages	
Available display languages via MultiLingua	□□□□□□□□, □□, □□□□, deutsch, dansk, english, suomi, français, ελληνικά, italiano, □□□, □□□, hrvatski, bahasa malaysia, nederlands, norsk, polski, português, română, русский, svenska, srpski, slovenčina, slovenščina, español, čeština, türkçe, українська, magyar

H 2851 B
Oven
in a mix and match design with networking and PerfectClean.

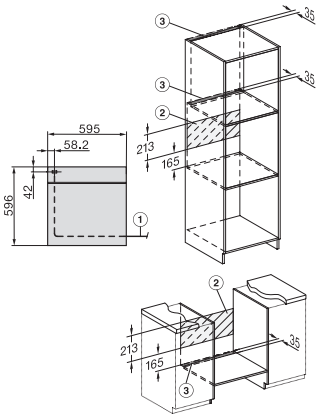

installation H7000 XL, installation drawing, GB, AU

1) Netzanschlussleitung, L=1500 mm, 2) In diesem Bereich kein Anschluss, 3) Lüftungsausschnitt min. 150 cm²

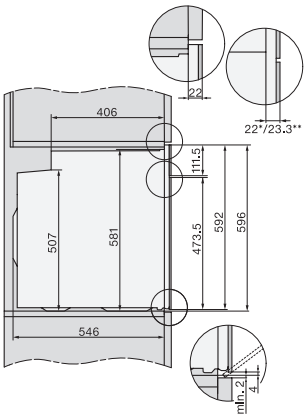

side view H7000 XL, installation drawings, GB, AU

22 mm – glass, 23.3 mm – metal

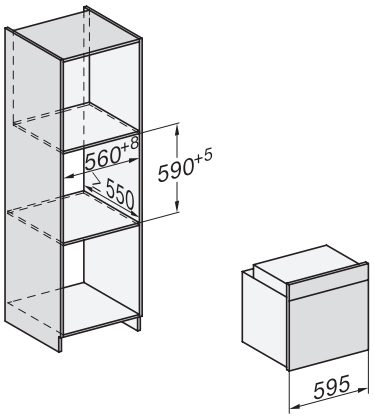

built-in H7000 XL, installation drawing

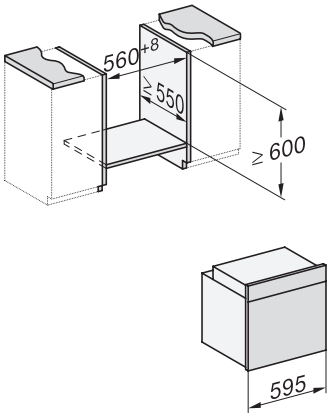

Installation H7000 XL underframe, installation drawings

If the oven is to be installed under a hob, follow the instructions for installing the hob and the height of the hob.

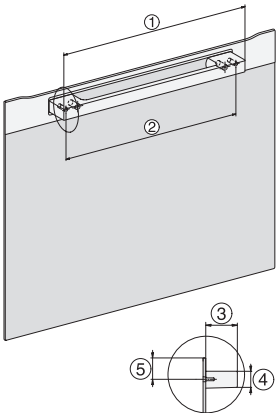

H7000 handle, installation drawing

1) 400 mm, 2) 360 mm, 3) 47 mm, 4) 24 mm, 5) 32.5 mm

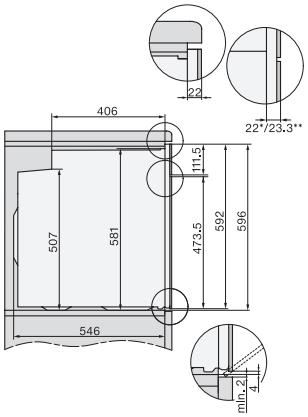

side view H7000 XL build-under, installation drawing, GB, AU

22 mm – glass, 23.3 mm – metal