Miele

H 2890 B
90 cm wide oven
in a perfect mix and match design with timer and PerfectClean.



- 7-segment display with retractable rotary controls – EasyControl
- Particularly easy to clean – PerfectClean finish
- Lots of room and flexibility – 90 l oven capacity on 3 levels
- Fast heating and even heat distribution – TwinPower
- Protects against burns – touch-cool fronts

EAN: 4002516218753 / Material number: 11093380 /
Old Material Number: 22289044GB

General information	
Model identifier	H 2890 B
Manufacturer material number	11093380
EAN number	4002516218753
Marketing class	Silver
Construction type and design	
PureLine	•
Retractable rotary controls	•
Construction type and design	
Built-in oven	•
Colour	Stainless steel/Clean Steel
Convenience features	
Rapid heat-up	•
Operating modes	
Defrosting	•
Fan plus	•
Conventional heat	•
Bottom heat	•
Fan grill	•
Grill	•
Eco hot air	•
User convenience	
Display	EasyControl
SoftOpen	•
SoftClose	•
Time of day display	•
Minute minder	•
Programmable end of cooking duration	•
Programmable cooking duration	•
Individual settings	•
Efficiency	
Energy efficiency class (A+++ – D)	A
Cleaning and care	
Stainless steel/CleanSteel finish	•
Oven compartment with PerfectClean and catalytically enamelled liners	•
Hinged grill element	•
CleanGlass door	•
Safety	
Appliance cooling system and touch-cool front	•
System lock	•
Technical data	
Oven compartment volume in l	90
No. of shelf levels	3
Numbered shelf levels	•
Oven light	2 halogen spots
TwinPower hot air fan	•
Plug type	3 pole without plug

H 2890 B
90 cm wide oven
in a perfect mix and match design with timer and PerfectClean.



EAN: 4002516218753 / Material number: 11093380 /
Old Material Number: 22289044GB

Niche width min. in mm	860
Niche width max. in mm	868
Niche height min. in mm	475
Niche depth in mm	550
Weight in kg	64,0
Total rated load in kW	3,70
Length of supply lead in m	1,80
Voltage in V	220-240
Frequency in Hz	50
Fuse rating in A	16
Number of phases	1
Replacing lamps	Customer
Accessories included	
Baking tray with PerfectClean	1
Baking and roasting rack without PerfectClean	1
Universal tray with PerfectClean	1
Removable side runners (pair)	1

H 2890 B
90 cm wide oven
in a perfect mix and match design with timer and PerfectClean.

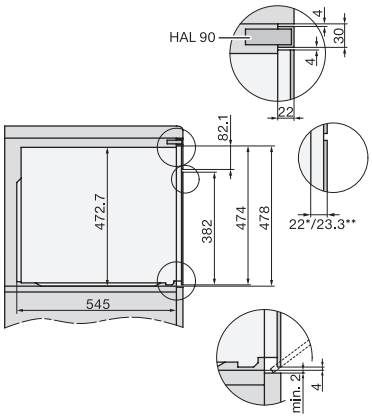

side view H7000 90, installation drawings, GB, AU

22 mm – glass, 23.3 mm – metal

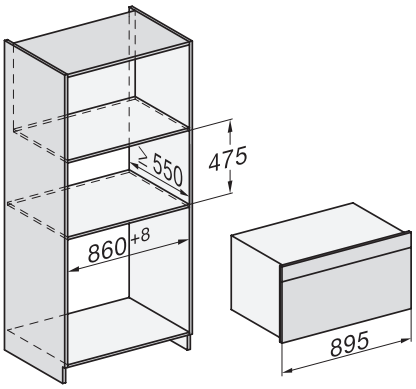

built-in H7000 90, installation drawing

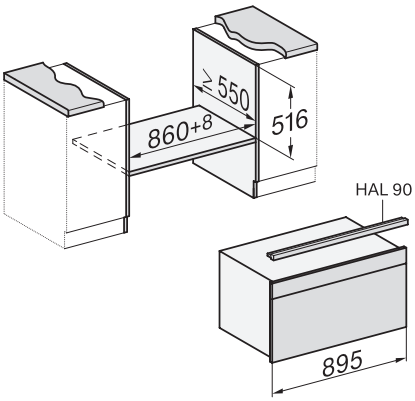

built-in H7000 90 build-under, installation drawing

If the oven is to be installed under a hob, follow the instructions for installing the hob and the height of the hob.

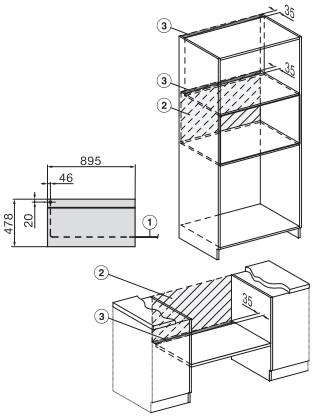

installation H7000 90, installation drawing

1) Mains connection cable, L=2000 mm, 2) No connection in this area, 3) Lüftungsausschnitt min. 150 cm²

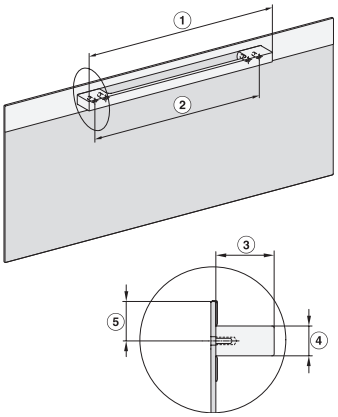

H2890B, installation drawings

1) 500 mm, 2) 444 mm, 3) 47 mm, 4) 24 mm, 5) 32.5 mm

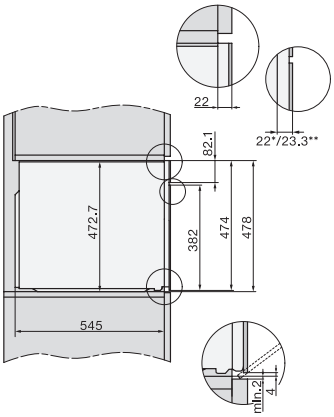

side view H7000 90 D1, installation drawings, GB, AU

22 mm – glass, 23.3 mm – metal