G 7200 SCi
Semi-integrated dishwasher
A I 43 dB I Cutlery tray I ComfortPlus baskets I QuickPowerWash I AutoOpen



- Tested for the equivalent of 20 years' service life*
- Best energy efficiency class A – energy-saving and eco-friendly
- Versatile and secure – ComfortPlus basket design
- Wonderful use of space – the 3D MultiFlex tray with more room for your cutlery
- Perfect results in less than one hour – QuickPowerWash
- Completely dry – Miele AutoOpen drying

* During the development phase of the G 5000 and G 7000 dishwasher series, Miele tested models and core components in 5600 wash cycles (= 280 wash cycles per year over a period of 20 years) in various programmes. More at: miele.com/20years

EAN: 4002516464068 / Material number: 11869910 /
Old Material Number: 21720057GB

General information	
Model identifier	G 7200 SCi
Manufacturer material number	11869910
EAN number	4002516464068
Marketing class	Gold
Model	
Semi-integrated dishwasher	•
60 cm dishwasher	•
Design	
Control panel colour	Stainless steel/CleanSteel
Control panel version	Straight fascia
Control type	Programme selector button
Display	1-line text display
Display colour	White
MultiLingua	•
Convenience	
Door closing aid	ComfortClose
Time left display	•
Delay start up to 24 hours	•
In-operation indicator	Display
Display language selection	•
Efficiency	
Energy efficiency class (A–G)	A
Water consumption in the Automatic programme in l from	6,0
Water consumption of the ECO programme in litres per programme cycle	8,4
Electricity consumption in the ECO programme in kWh	0,54
Energy consumption of the ECO programme in kWh after 100 programme cycles	54
Consumption value in kWh in the ECO programme with hot water connection	0,29
Duration of ECO programme in minutes	230
Power rating with delay start in W	0,30
Power rating in off mode in W	0,30
Power rating in standby mode in W	0,30
Number of place settings	14
Noise emission class	B
Noise emissions in dB(A)	43
EcoFeedback	•
EcoPower Technology	•
Proven hygiene	•
Hot water connection	•
Half load	•
Quality of results	
Fresh water dishwasher	•
AutoOpen drying	•
SensorDry	•
Active condensation drying	•

Miele

G 7200 SCi

Semi-integrated dishwasher

A I 43 dB I Cutlery tray I ComfortPlus baskets I QuickPowerWash I AutoOpen



EAN: 4002516464068 / Material number: 11869910 /
Old Material Number: 21720057GB

BrilliantGlassCare	•
Wash programmes	
QuickPowerWash	•
ECO	•
Automatic	•
Intensive 75 °C	•
PowerWash	•
Gentle	•
ExtraQuiet 40 dB(A)	•
Appliance care	•
Dishwashing options	
IntenseZone	•
Express	•
Extra Clean	•
Extra dry	•
Basket design	
Cutlery loading	3D MultiFlex tray
FlexCare cup rack	1
Basket design	ComfortPlus
Safety	
Waterproof system	•
Filter indicator light	•
Safety lock	•
Technical data	
Niche width minimal in mm	600
Niche width max in mm	600
Niche height minimal in mm	805
Niche height maximal in mm	870
Niche depth in mm	570
Appliance width in mm	598
Appliance height in mm	805
Appliance depth in mm	570
Depth with door open in cm	116,5
Net weight in kg	48,2
Total rated load in kW	2,00
Voltage in V	230
Fuse rating in A	10
Number of phases	1
Electrical frequency standard	50
Length of water inlet hose in m	1,50
Length of water drain hose in m	1,50
Length of supply lead in m	1,80
Min. front panel weight in kg	3,0
Max. front panel weight in kg	10,0
[can be retrofitted by Service to min.]	8,0
[can be retrofitted by Service to max.]	18,0
Accessories included	
Voucher for 1 x box of UltraTabs (20 tabs) or 3 boxes (60 tabs in each) at a reduced price	•

G 7200 SCi
Semi-integrated dishwasher
A I 43 dB I Cutlery tray I ComfortPlus baskets I QuickPowerWash I AutoOpen



EAN: 4002516464068 / Material number: 11869910 /
Old Material Number: 21720057GB

Available display languages	
Available display languages via MultiLingua	□□□□□□□, deutsch, english (AU), english (GB), □□□, bahasa malaysia

G 7200 SCi
Semi-integrated dishwasher
A I 43 dB I Cutlery tray I ComfortPlus baskets I QuickPowerWash I AutoOpen

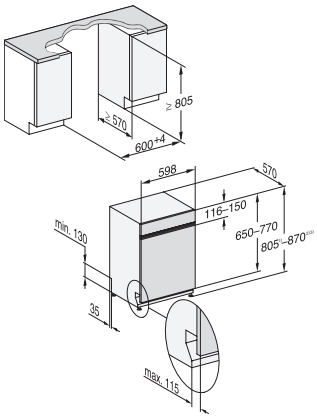

G7000, integrated dishwasher, 60cm (installation drawing)

1) Plinth height 35-155 mm, 2) Plinth height 100-220 mm, 3) Appliance height max. 930 mm with plinth height conversion kit (Mat.-Nr. 6.394.761)

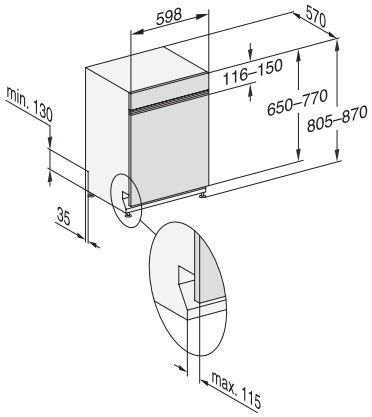

G7000, integrated dishwasher, 60cm (installation drawing)