# WTD160 WCS 8/5 kg
# WT1 washer-dryer:
# 8/5 kg I 1500 rpm I PerfectCare I Miele@home I CapDosing




EAN: 4002516371854 / Material number: 11576570 / Old Material Number: 11TD1601GB

- Tested for 20 years of perfect laundry care*
- 2 in 1: wash 8 kg and dry 5 kg in a single appliance
- Gentle laundry care with the four PerfectCare functions
- Complete app control of your washer-dryer with Miele@home**
- Exclusive CapDosing range for different fabrics and stains***

* During the development phase of the WT1 washer-dryer series, Miele tested models and core components in 5000 wash and 4000 drying cycles (= 5 wash and 4 drying cycles per week for 50 weeks per year) in various programmes. More: miele.com/20years

** This is a separate digital offer from Miele & Cie. KG. The range of functions can vary depending on the model and the country. Acceptance of the Terms and Conditions and Privacy Policy for Miele digital products and services in the Miele app required. Miele reserves the right to change or discontinue the digital offer at any time.

*** Patent EP 2 365 120

| | |
|---|---|
| **General information** | |
| Model identifier | WTD160 WCS 8/5 kg |
| Manufacturer material number | 11576570 |
| EAN number | 4002516371854 |
| Marketing class | Gold |
| **Construction type** | |
| Suitable for stacking | • |
| Door hinging | right |
| Side-by-side | • |
| Slot-in | • |
| Can be built-under | • |
| **Model** | |
| Front-loader | • |
| **Washing machine with TD fct.** | |
| Continuous washing and drying cycle | • |
| Electronic residual moisture sensing | • |
| Condenser dryers with water cooling | • |
| Thermospin | • |
| **Spinning** | |
| Max. spin speed | 1500 |
| Rinse hold | • |
| Without spin function | • |
| **Design** | |
| Appliance colour | Lotus white |
| Control panel colour | Lotus white |
| Door design | Graphite grey PearlFinish |
| Rotary selector colour | Lotus White |
| Control panel version | Straight |
| Control type | Rotary control |
| Display | DirectSensor white, 7 segment |
| **Gentle laundry care** | |
| Honeycomb drum | • |
| Load in kg for washing | 8 |
| Load in kg when drying | 5 |
| PerfectCare technology | • |
| **User convenience** | |
| Networking with Miele@home | • |
| Delay start up to 24 hours | • |
| Time left display | • |
| Programme sequence indicator | No |
| Automatic rinse out fluff | • |
| AutoClean detergent drawer | • |
| AddLoad | • |
| **Efficiency** | |
| Energy efficiency class (A–G) | A |
| Energy efficiency class for washing and drying (A–G) | D |

WTD160 WCS 8/5 kg
WT1 washer-dryer:
8/5 kg I 1500 rpm I PerfectCare I Miele@home I CapDosing




EAN: 4002516371854 / Material number: 11576570 / Old Material Number: 11TD1601GB

| | |
|---|---|
| Weighted energy consumption per 100 operating cycles for the complete operating cycle in kWh | 266 |
| Weighted energy consumption per 100 operating cycles for the wash cycle in kWh | 47 |
| Weighted water consumption per operating cycle for the wash cycle in l | 47 |
| Weighted water consumption per operating cycle for the complete operating cycle in l | 68 |
| Spin efficiency class (A–G) | B |
| Acoustic airborne noise emission class (spin cycle; A–D) | A |
| Sound emissions during spin cycle in dB(A) re 1 pW | 71 |
| Programme running time at nominal capacity for the wash cycle | 219 |
| Programme running time at nominal capacity for the complete operating cycle | 389 |
| Power rating in off mode in W | 0,30 |
| Power rating in networked standby in W | 0,70 |
| Low temperature wash "Cold" and "20 °C" | • |
| Automatic load control | • |
| Flow meter | • |
| Foam sensing | • |
| ProfiEco motor | • |
| **Wash programmes** | |
| Cottons (coloureds) | • |
| Minimum iron | • |
| Shirts | • |
| Woollens (hand-washable) | • |
| Express | • |
| Dark garments / Denim | • |
| Cottons arrow | • |
| ECO 40-60 | • |
| **Drying programmes** | |
| Cottons (coloureds) | • |
| Cottons arrow | • |
| Minimum iron | • |
| Delicates | • |
| Shirts | • |
| Woollens | • |
| Express | • |
| Dark garments / Denim | • |
| Warm air | • |
| **Washing extras** | |
| Short | • |
| **Drying extras** | |
| Anti-crease | • |
| Low temperature | • |
| **Safety** | |
| Water protection system | Watercontrol-System |
| Safety lock | • |
| PIN-Code | • |

WTD160 WCS 8/5 kg
WT1 washer-dryer:
8/5 kg I 1500 rpm I PerfectCare I Miele@home I CapDosing




EAN: 4002516371854 / Material number: 11576570 / Old Material Number: 11TD1601GB

| Technical data | |
|---|---|
| Dimensions in mm (width) | 596 |
| Dimensions in mm (height) | 850 |
| Dimensions in mm (depth) | 637 |
| Appliance depth in mm with opened door | 1055 |
| Weight in kg | 94 |
| Voltage in V | 220-240 |
| Fuse rating in A | 13 |
| Frequency in Hz | 50 |
| Total rated load in kW | 2,10-2,40 |
| Length of supply lead in m | 2 |

WTD160 WCS 8/5 kg
WT1 washer-dryer:
8/5 kg I 1500 rpm I PerfectCare I Miele@home I CapDosing

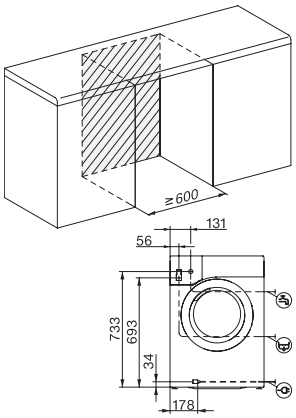


WT1 8/5 kg, installation drawing, slanted facia or straight facia, measures in mm

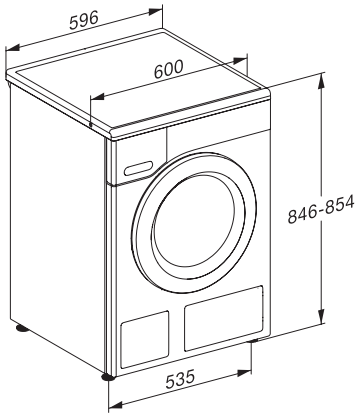


WT1 8/5 kg, drawing, straight facia, measures in mm

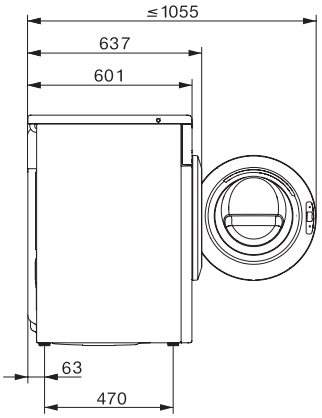


WT1 8/5 kg, drawing, straight facia, measures in mm

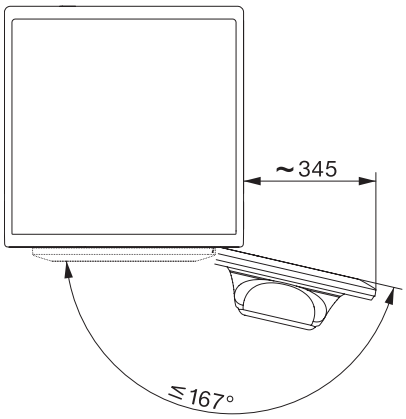


WT1 8/5 kg, drawing, straight facia, measures in mm