KM 8575 FL
Induction hob with onset controls
916 mm | panorama design | PowerFlex cooking areas | M Sense ready



EAN: 4002516972945 / Material number: 12944700 /
Old Material Number: 26185751GB

- 4 cooking zones incl. 2 powerful PowerFlex cooking areas
- Precise settings via 6 MultiSlide sliders including intelligent networking
- Prepared for cooking and frying assistance with M Sense cookware – M Sense ready
- Shortest heat-up times thanks to Booster level
- In 916 mm width and panorama design for flush-fit or surface-mounted installation

KM 8575 FL

Induction hob with onset controls

916 mm | panorama design | PowerFlex cooking areas | M Sense ready

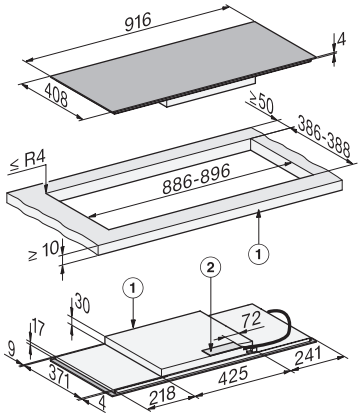

KM8575FL surface-mounted (*Fußnote) Installation drawing

1) front, 2) Mains connection box, The mains connection cable (L = 1440 mm) is enclosed loose

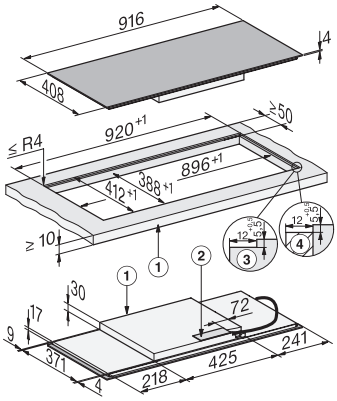

KM8575FL flush (*Fußnote) (Installation drawing)

1) front, 2) Mains connection box, The mains connection cable (L = 1440 mm) is enclosed loosely, 3) Step milling natural stone worktop, 4) Wooden strip 12 mm (no supplied accessories)