CS 1312 BG
ProLine element
with electrically heated barbecue grill

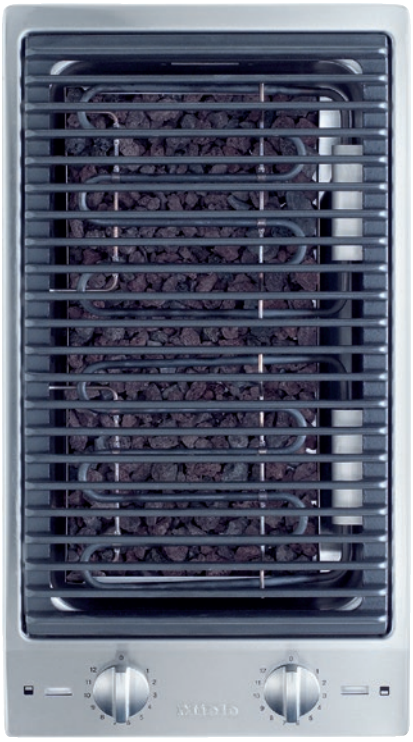

- Professional design – Stainless steel trough, 288 mm wide
- Particularly versatile – 2 separately controlled heating areas
- Easy and direct controls -operation via metal rotary dial control
- Particularly convenient and safe – in operation indicator
- Extensive range – Standard as well as optional accessories

EAN: 4002514413976 / Material number: 07120210 / Old Material Number: 27131250GB

General information	
Model identifier	CS 1312 BG
Manufacturer material number	07120210
EAN number	4002514413976
Marketing class	Gold
Heating type	
Heating type	Other type of heating
Construction type	
ProLine	•
Design	
Stainless-steel frame	•
Surface-mounted installation	•
Cast-iron griddle	•
1st cooking zone/cooking area	
Position	In front
Type	Electric grill
Size in mm	210x250
Max. rating in W	1500
2nd cooking zone/cooking area	
Position	Rear
Type	Electric grill
Size in mm	210x250
Max. rating in W	1500
User convenience	
Operation via knobs	•
Technical data	
Dimensions (H x W x D) in mm	115 x 288 x 520
Dimensions in mm (width)	288
Dimensions in mm (height)	115
Dimensions in mm (depth)	520
Cut-out dimensions (W x D) with surface-mounted installation in mm	272 mm x 500 mm
Cutout dimensions in mm (width) with surface-mounted installation	272 mm
Cutout dimensions in mm (depth) with surface-mounted installation	500 mm
Weight in kg	11
Total rated load in kW	3,00
Length of supply lead in m	2,0
Voltage in V	230-240
Frequency in Hz	50-60
Accessories included	
Mains cable	Yes
Lava rocks	•
Cleaning brush	•

CS 1312 BG
ProLine element
with electrically heated barbecue grill

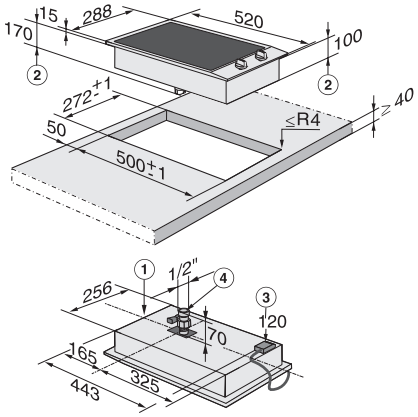

CS 1312 BG (installation drawing)

Installation note: Allow sufficient space below the electric barbeque for drainage of water into a suitable container. The clearance between the electric barbecue and a , Miele overhead rangehood must be no less than 65 cm. Recirculating rangehood operation above an electric barbecue is not recommended., 1) Front, 2) Height for building in , 3) Mains connection box with cable, 2000 mm long, 4) Drainage valve