KM 2012
Gas hob
with a mono wok burner for special applications.



- Simple controls -single-handed operation via rotary dial control
- Professional design – 650 mm wide stainless steel trough
- Particularly versatile – 4 burners incl. 1 mono wok
- Extremely safe – GasStop function
- Easy cleaning – dishwasher-safe ComfortClean pot rests

EAN: 4002514356440 / Material number: 07051710 / Old Material Number: 262012501

General information	
Model identifier	KM 2012
Manufacturer material number	07051710
EAN number	4002514356440
Marketing class	Silver
Heating type	
Heating type	Gas
Construction type	
Independent of cooker	•
Design	
Stainless steel trough	•
Cast iron pot rests (matt black enamelled)	•
Cooking zone details	
Number of cooking zones	4
Gas burner power rating	
Small burner in kW	1,00
Medium burner in kW	1,75
Large burner in kW	2,60
Mono wok burner in kW	3,80
1st cooking zone/cooking area	
Position	front left
Type	Single wok burner
2nd cooking zone/cooking area	
Position	rear left
Type	Economy burner
3rd cooking zone/cooking area	
Position	rear right
Type	Standard burner
4th cooking zone/cooking area	
Position	front right
Type	Standard burner
User convenience	
Operation via knobs	•
Electronic ignition with single-hand operation	•
Cleaning and care	
Dishwasher-proof pot rests	•
PerfectClean burner	•
Safety	
GasStop	•
Technical data	
Dimensions (H x W x D) in mm	90 x 650 x 520
Dimensions in mm (width)	650
Dimensions in mm (height)	90
Dimensions in mm (depth)	520
Cutout dimensions in mm (width) with surface-mounted installation	560 mm
Cutout dimensions in mm (depth) with surface-mounted installation	480 mm

KM 2012
Gas hob
with a mono wok burner for special applications.



EAN: 4002514356440 / Material number: 07051710 / Old Material Number: 26201250I

Weight in kg	14
Length of supply lead in m	2,0
Position of gas connection	Hinten links
Voltage in V	220-240
Frequency in Hz	50-60
Accessories included	
Mains cable	No

KM 2012
Gas hob
with a mono wok burner for special applications.

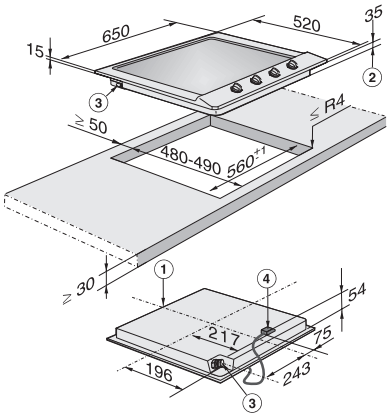

KM2010G (Installation drawing)

1. Front, 2 Building-in depth, 3. Gas connection R 1/2 - ISO 7-1 (DIN EN 10226), 4. Mains connection box with mains connection cable, L = 2000 mm