FNS 4382 E
Freestanding freezer
with NoFrost and SideOpen for a convenient side-by-side combination.



- No icing up of food and no need to defrost thanks to NoFrost
- More space for particularly large frozen food – XXL box
- Handle-less design thanks to an integrated handle design
- Food is frozen quickly and gently – SuperFreeze
- Flexible increase in freezer volume – VarioRoom

EAN: 4002516517313 / Material number: 11953080 /
Old Material Number: 37438250AUS

General information	
Model identifier	FNS 4382 E
Manufacturer material number	11953080
EAN number	4002516517313
Marketing class	Silver
Appliance category	
Freezer	•
Construction type	
Freestanding appliance	•
Door hinge	Left
Convertible door hinging	•
Side-by-side enabled	•
Design	
Casing colour	Silver
Front colour	Stainless steel/CleanSteel
User convenience	
Door opening aid	SideOpen
Party mode	•
NoFrost	•
VarioRoom	•
Control system	
Operating concept	SensorTouch
Precise adjustment	Freezer temperature
SuperFreeze	•
No. of temperature zones	1
Sabbath mode	•
Freezer/Freezer section	
Number of freezer drawers	7
including XXL box	1
Safety	
Lock function	•
Acoustic door alarm	•
Acoustic temperature alarm	•
Optical door alarm	•
Optical temperature alarm	•
Power cut indication for freezer section	•
Internal heater for operation with low ambient temperatures	•
Technical data	
Appliance width in mm	600
Appliance height in mm	1855
Appliance depth in mm	675
Weight in kg	69,9
Climate range	SN-T
4* freezer compartment in l	277
Total usable capacity in l	277
Storage time in case of fault in h	14
Current consumption (mA)	1300

FNS 4382 E
Freestanding freezer
with NoFrost and SideOpen for a convenient side-by-side combination.



EAN: 4002516517313 / Material number: 11953080 /
Old Material Number: 37438250AUS

Voltage in V	220-240
Fuse rating in A	10
Number of phases	1
Frequency in Hz	50-60
Length of supply lead in m	2,2
Accessories included	
Water filter	Nein
Ice cube tray	•
Side-by-Side kit	•

FNS 4382 E
Freestanding freezer
with NoFrost and SideOpen for a convenient side-by-side combination.

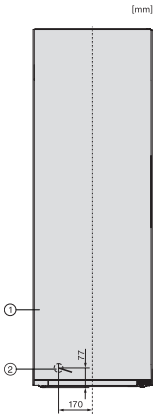

FN4372E, FN4372D, FN4872D, FN4874C, FNS4382E, FNS4382E C, FNS4782E bb, FNS4882D, installation

1. View from the front, 2. Mains connection cable, L = 2100 mm

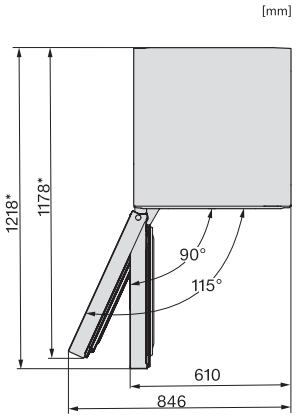

FNS4382D, FNS4382E, top view

To achieve the declared energy consumption, the spacers supplied with the unit must be used. This increases the depth of the unit by approx. 15 mm. The unit is fully functional without the use of the spacers, but has a slightly higher energy consumption.

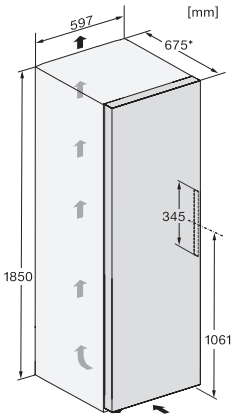

FNS4382D, FNS4382E, installation sketch

*To achieve the declared energy consumption, the spacers supplied with the unit must be used. This increases the depth of the unit by approx. 15 mm. The unit is fully functional without the use of the spacers, but has a slightly higher energy consumption.

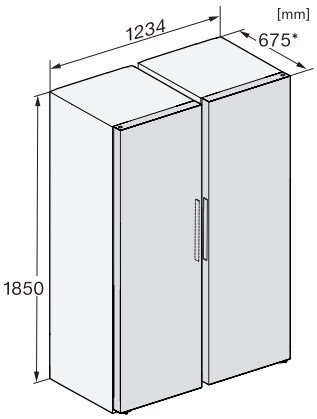

KS4383ED, KS4887DD, FNS4382D, FNS4382E, FNS4882D, installation sketch, Side-by-Side

*To achieve the declared energy consumption, the spacers supplied with the unit must be used. This increases the depth of the unit by approx. 15 mm. The unit is fully functional without the use of the spacers, but has a slightly higher energy consumption.

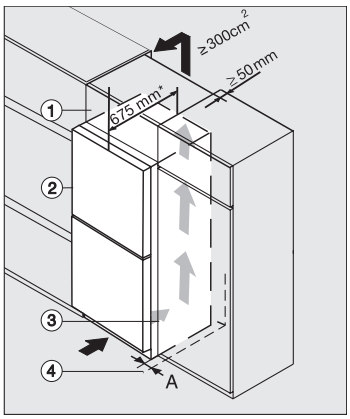

Integrating freestanding refrigeration appliance in a run of kitchen units, edt/cs, ws, bst, el

1. Top box, 2. Refrigeration appliance, door depth = 75 mm , 3. Housing unit, 4. Wall, A = 25 mm (with recessed grip)/60 mm (with handle), The appliance depth is increased by approx. 15 mm for refrigeration appliances with wall spacers fitted.