KWT 7112 iG

Built-in wine conditioning unit, 45 cm niche height
with FlexiFrame Plus and Push2open for the most demanding wine connoisseurs.

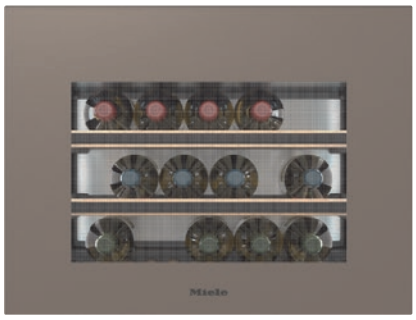

- Great storage of larger wine bottles thanks to FlexiFrame Plus
- Perfect design for handleless kitchens – Push2open
- Odourless refrigeration section thanks to Active AirClean filters
- Present your wine in the perfect light – LED lighting
- Optimum wine protection through UV filters in tinted glass front

EAN: 4002516813392 / Material number: 12615940 /
Old Material Number: 36711204EU1

General information	
Model identifier	KWT 7112 iG
Manufacturer material number	12615940
EAN number	4002516813392
Marketing class	Diamond
Appliance category	
Wine conditioning unit	•
Construction type	
Built-in appliance	•
Integrated appliance	•
Door hinge	Bottom
Design	
Front colour	Pearl beige
Wine compartment lighting	LED illumination
User convenience	
Networking with Miele@home	•
Accessories required	XKS 3130 W, XKV 3000 KF
Door opening aid	Push2open
DynaCool	•
SoftClose	•
Push2open	•
Total number of shelves	3
Number of shelves	3
Shelf material	Beechwood
Number of FlexiFrame racks	2
Number of FlexiFrame Plus wooden racks	2
Low-vibration storage	•
Control system	
Operating concept	TouchControl
No. of temperature zones	1
Min. temperature setting range in °C	5
Max. temperature setting range in °C	20
Efficiency	
Annual energy consumption in kWh	115,71
Energy consumption in 24 h in kWh	0,31
Safety	
Lock function	•
Acoustic door alarm	•
Acoustic temperature alarm	•
Optical door alarm	•
Optical temperature alarm	•
Technical data	
Niche width in mm min.	560
Niche width in mm max.	568
Niche height in mm min.	450
Niche height in mm max.	452
Niche depth in mm	550

KWT 7112 iG

Built-in wine conditioning unit, 45 cm niche height
with FlexiFrame Plus and Push2open for the most demanding wine connoisseurs.

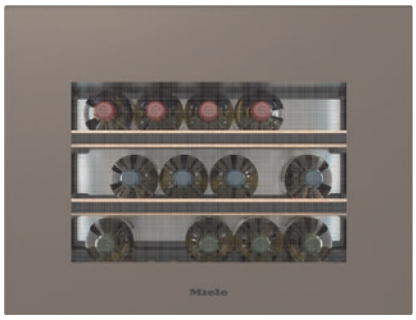

EAN: 4002516813392 / Material number: 12615940 /
Old Material Number: 36711204EU1

Appliance width in mm	595
Appliance height in mm	455
Appliance depth in mm	559
Weight in kg	36,0
Door hinge technology	Fixed door
Climate range	SN-ST
Refrigerator compartment in l	47
Wine compartment in l	47
Total usable capacity in l	46
0.75 l Bordeaux bottle capacity (no. of bottles)	18 bottles
Acoustic airborne noise emission class (A–D)	B
Sound emissions in dB(A) re 1 pW	32
Current consumption (mA)	500
Voltage in V	220-240
Fuse rating in A	10
Number of phases	1
Frequency in Hz	50
Length of supply lead in m	2,2
Accessories included	
Water filter	Nein

KWT 7112 iG

Built-in wine conditioning unit, 45 cm niche height
with FlexiFrame Plus and Push2open for the most demanding wine connoisseurs.

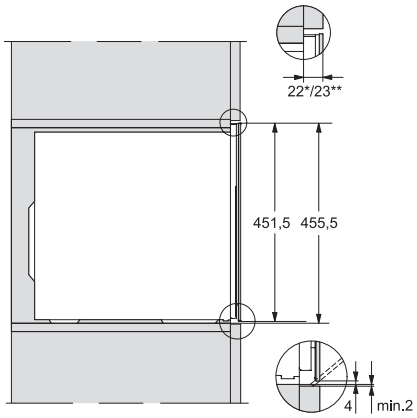

KWT7112 iG, *Footnote (Sketch)

* Appliances with glass front, ** Appliances with metal front,

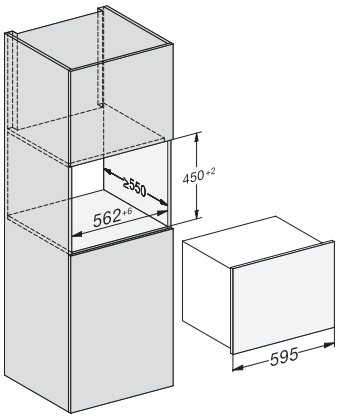

KWT7112 iG (Sketch)

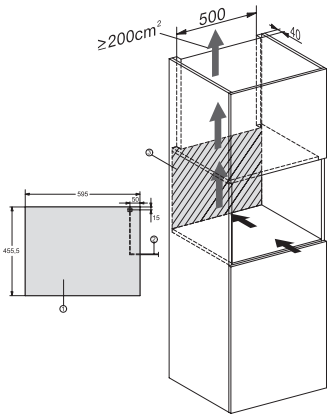

KWT7112 iG, *Footnote (Sketch)

* Appliances with glass front, ** Appliances with metal front, 1) Front view, 2) Mains connection cable, L=2200 mm, 3) No connection in this area,

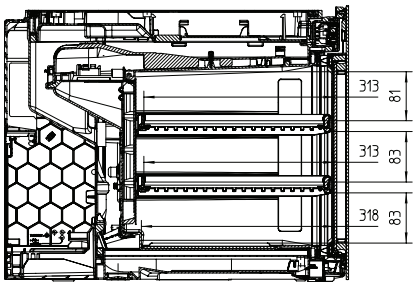

KWT7112iG, KWT6112iG, Interior dimensions (Installation drawings)