G 7150 SCVi
Fully integrated dishwashers
44 dB I Cutlery tray I ExtraComfort baskets I QuickPowerWash I AutoOpen



EAN: 4002516101901 / Material number: 11091560 / Old Material Number: 21715062GB

- Tested for the equivalent of 20 years' service life*
- Convenient, great results and perfect for everyday use – ExtraComfort baskets
- Perfect results in less than one hour – QuickPowerWash
- Completely dry – Miele AutoOpen drying
- Thanks to delay start, you can set a start time for the wash cycle up to 24 hours in advance

* During the development phase of the G 5000 and G 7000 dishwasher series, Miele tested models and core components in 5600 wash cycles (= 280 wash cycles per year over a period of 20 years) in various programmes. More at: miele.com/20years

General information	
Model identifier	G 7150 SCVi
Manufacturer material number	11091560
EAN number	4002516101901
Marketing class	Gold
Model	
Fully integrated dishwasher	•
60 cm dishwasher	•
Design	
Control panel colour	Stainless Steel.
Control panel version	Fully integrated fascia
Control type	Programme selector button
Display	1-line text display
Display colour	White
MultiLingua	•
Convenience	
Door closing aid	ComfortClose
Operating noise dB(A) re 1 pW	44
Time left display	•
Delay start up to 24 hours	•
In-operation indicator	optical and acoustic
Display language selection	•
Efficiency	
Energy efficiency class (A–G)	C
Water consumption in the Automatic programme in l from	6,0
Water consumption of the ECO programme in litres per programme cycle	8,9
Water consumption in the ECO programme in l	8,9
Electricity consumption in the ECO programme in kWh	0,74
Annual water consumption in the ECO programme in l	2492
Annual energy consumption in ECO programme in kWh	213
Energy consumption of the ECO programme in kWh after 100 programme cycles	74
Consumption value in kWh in the ECO programme with hot water connection	0,52
Duration of ECO programme in minutes	238
Power rating with delay start in W	0,30
Power rating in off mode in W	0,30
Power rating in standby mode in W	0,30
Number of place settings	14
Noise emission class	B
Noise emissions in dB(A)	43
EcoFeedback	•
EcoPower Technology	•
Proven hygiene	•
Hot water connection	•
Half load	•
Quality of results	
Fresh water dishwasher	•

Miele

G 7150 SCVi
Fully integrated dishwashers
44 dB | Cutlery tray | ExtraComfort baskets | QuickPowerWash | AutoOpen



EAN: 4002516101901 / Material number: 11091560 / Old Material Number: 21715062GB

AutoOpen drying	•
SensorDry	•
Active condensation drying	•
BrilliantGlassCare	•
Wash programmes	
QuickPowerWash	•
ECO	•
Automatic	•
Intensive 75 °C	•
PowerWash	•
Gentle	•
ExtraQuiet 40 dB(A)	•
Appliance care	•
Dishwashing options	
IntenseZone	•
Express	•
Extra Clean	•
Extra dry	•
Basket design	
Cutlery loading	3D MultiFlex tray
FlexCare glass holder	2
FlexCare cup rack	1
Basket design	ExtraComfort
Safety	
Waterproof system	•
Filter indicator light	•
Technical data	
Niche width minimal in mm	600
Niche width max in mm	600
Niche height minimal in mm	805
Niche height maximal in mm	870
Niche depth in mm	550
Appliance width in mm	598
Appliance height in mm	805
Appliance depth in mm	550
Depth with door open in cm	116,5
Net weight in kg	47,0
Total rated load in kW	2,00
Voltage in V	230
Fuse rating in A	10
Number of phases	1
Electrical frequency standard	50
Length of water inlet hose in m	1,50
Length of water drain hose in m	1,50
Length of supply lead in m	1,80
Min. front panel weight in kg	4,0
Max. front panel weight in kg	10,0
[can be retrofitted by Service to min.]	8,0
[can be retrofitted by Service to max.]	16,0

G 7150 SCVi
Fully integrated dishwashers
44 dB I Cutlery tray I ExtraComfort baskets I QuickPowerWash I AutoOpen



EAN: 4002516101901 / Material number: 11091560 / Old Material Number: 21715062GB

Accessories included	
Voucher for 1 x box of UltraTabs (20 tabs) or 3 boxes (60 tabs in each) at a reduced price	•
Available display languages	
Available display languages via MultiLingua	deutsch, english, français, italiano, nederlands, português, español, türkçe

G 7150 SCVi
Fully integrated dishwashers
44 dB I Cutlery tray I ExtraComfort baskets I QuickPowerWash I AutoOpen

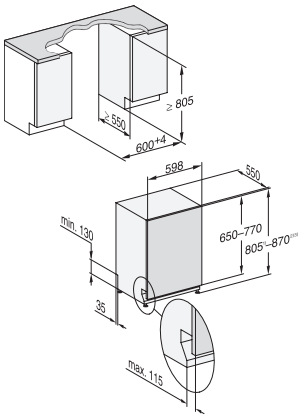

G7000, fully integrated dishwasher, 60cm (installation drawing)

1) Plinth height 35-155 mm, 2) Plinth height 100-220 mm, 3) Appliance height max. 930 mm with plinth height conversion kit (Mat.-Nr. 6.394.761),

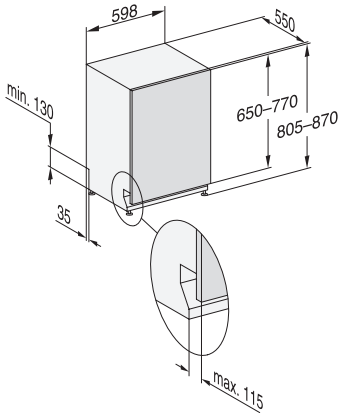

G7000, fully integrated dishwasher, 60cm (installation drawing)