KM 3010
Gas hob
with 4 burners



- Simple controls -single-handed operation via rotary dial control
- Elegant design – 626 mm wide gas hob on glass for surface-mounted installation
- Versatile – 4 burners
- Extremely safe – GasStop function
- Easy cleaning – dishwasher-safe ComfortClean pot rests

EAN: 4002515094013 / Material number: 09228920 / Old Material Number: 26301050I

General information	
Model identifier	KM 3010
Manufacturer material number	09228920
EAN number	4002515094013
Marketing class	Silver
Heating type	
Heating type	Gas
Construction type	
Independent of cooker	•
Design	
Ceramic surface colour	Black
Miele logo embossed in stainless steel	•
Cast iron pot rests (matt black enamelled)	•
Cooking zone details	
Number of cooking zones	4
Gas burner power rating	
Small burner in kW	1,00
Medium burner in kW	1,70
Large burner in kW	2,70
1st cooking zone/cooking area	
Position	front left
Type	High-speed burner
2nd cooking zone/cooking area	
Position	rear left
Type	Economy burner
3rd cooking zone/cooking area	
Position	rear right
Type	Standard burner
4th cooking zone/cooking area	
Position	front right
Type	Standard burner
User convenience	
Operation via knobs	•
Electronic ignition with single-hand operation	•
Cleaning and care	
Dishwasher-proof pot rests	•
Safety	
GasStop	•
GasStop & ReStart	•
Technical data	
Dimensions (H x W x D) in mm	54 x 626 x 526
Dimensions in mm (width)	626
Dimensions in mm (height)	54
Dimensions in mm (depth)	526
Casing height incl. connection box in mm	63
Cutout dimensions in mm (width) with surface-mounted installation	600 mm

KM 3010
Gas hob
with 4 burners



EAN: 4002515094013 / Material number: 09228920 / Old Material Number: 26301050I

Cutout dimensions in mm (depth) with surface-mounted installation	500 mm
Weight in kg	17
Length of supply lead in m	2,0
Position of gas connection	Hinten links
Voltage in V	220-240
Frequency in Hz	50-60
Accessories included	
Mains cable	No
Jets for liquid gas	•

KM 3010
Gas hob
with 4 burners

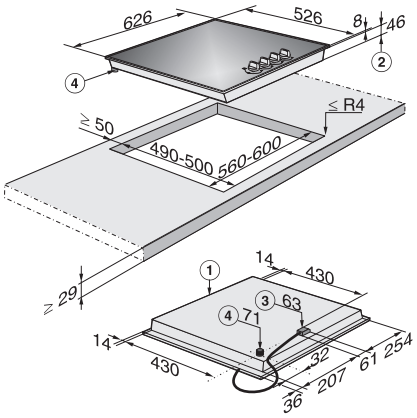

KM 3010 G (Installation drawing)

1. Front, 2. Casing depth, 3. Mains connection box with mains connection cable L = 2000 mmm, 4. Gas connection R 1/2" – ISO 7-1 (DIN EN 10226)