# WWD380 WCS PWash&Steam&9kg
## W1 front-loader washing machine:
## A -20 %* I 9 kg I 1400 rpm I SteamCare I QuickPowerWash I Miele@home



- Tested for 20 years of perfect laundry care*
- Save even more energy with A -20 %**
- SteamCare reduces ironing time by up to 50 % and freshens up your clothes
- QuickPowerWash ensures fast, efficient results in just 49 minutes***
- Complete app control of your washing machine with Miele@home****

* During the development phase of the W1 / W2 washing machine series, Miele tested models and core components in 5000 wash loads (= 5 wash loads per week for 50 weeks per year) in various programmes. More: miele.com/20years

** 20 % more economical than the threshold value (52) for energy efficiency class A.

*** This applies to all Miele washing machines that enable the process and machine-related parameters presented in the summary of the WL 1110/18 test report to be implemented.

**** This is a separate digital offer from Miele & Cie. KG. The range of functions can vary depending on the model and the country. Acceptance of the Terms and Conditions and Privacy Policy for Miele digital products and services in the Miele app required. Miele reserves the right to change or discontinue the digital offer at any time.

EAN: 4002516864882 / Material number: 12721220 /
Old Material Number: 11WD3801GB

| | |
|---|---|
| **General information** | |
| Model identifier | WWD380 WCS PWash&Steam&9kg |
| Manufacturer material number | 12721220 |
| EAN number | 4002516864882 |
| Marketing class | Gold |
| **Construction type** | |
| Suitable for stacking | • |
| Door hinging | right |
| Side-by-side | • |
| Slot-in | • |
| **Model** | |
| Product brand | W1 White Edition |
| Front-loader | • |
| **Spinning** | |
| Max. spin speed | 1400 |
| Rinse hold | • |
| Without spin function | • |
| **Design** | |
| Appliance colour | Lotus white |
| Control panel colour | Lotus white |
| Door design | Obsidian black with white ring |
| Rotary selector colour | Lotus White |
| Control panel version | 5° inclined |
| Control type | Rotary control |
| Display | DirectSensor white, 7 segment |
| **Cleaning performance** | |
| Innovative PowerWash technology | • |
| CapDosing portioned dispensing | • |
| **Gentle laundry care** | |
| Honeycomb drum | • |
| Load in kg | 9 |
| **User convenience** | |
| Networking with Miele@home | • |
| SteamCare steam system | • |
| Delay start up to 24 hours | • |
| Time left display | • |
| AutoClean detergent drawer | • |
| AddLoad | • |
| **Efficiency** | |
| Energy efficiency class (A–G) | A |
| More economical than the threshold value (52) for energy efficiency class A | 20% |
| Weighted energy consumption per 100 operating cycles for the wash cycle in kWh | 40 |
| Weighted water consumption per cycle in l | 50 |
| Spin efficiency class (A–G) | B |

Miele

WWD380 WCS PWash&Steam&9kg
W1 front-loader washing machine:
A -20 %* I 9 kg I 1400 rpm I SteamCare I QuickPowerWash I Miele@home



EAN: 4002516864882 / Material number: 12721220 /
Old Material Number: 11WD3801GB

| | |
|---|---|
| Acoustic airborne noise emission class (spin cycle; A–D) | A |
| Sound emissions during spin cycle in dB(A) re 1 pW | 72 |
| Duration of the “ECO 40–60” programme at nominal capacity | 229 |
| Power rating in off mode in W | 0,30 |
| Power rating in networked standby in W | 0,60 |
| Low temperature wash "Cold" and "20 °C" | • |
| Automatic load control | • |
| Flow meter | • |
| Foam sensing | • |
| ProfiEco motor | • |
| **Wash programmes** | |
| QuickPowerWash | • |
| Cottons (coloureds) | • |
| Minimum iron | • |
| Delicates | • |
| Shirts | • |
| Woollens (hand-washable) | • |
| Express 20 | • |
| Dark garments / Denim | • |
| Drain / Spin | • |
| ECO 40-60 | • |
| **Washing extras** | |
| Short | • |
| Pre-wash | • |
| Water plus | • |
| Additional rinse cycle | • |
| Pre-ironing with steam | • |
| Buzzer | • |
| **Safety** | |
| Water protection system | Watercontrol-System |
| Safety lock | • |
| PIN-Code | • |
| Optical interface | • |
| **Technical data** | |
| Dimensions (H x W x D) in mm | 850 x 596 x 643 |
| Dimensions in mm (width) | 596 |
| Dimensions in mm (height) | 850 |
| Dimensions in mm (depth) | 643 |
| Appliance depth in mm with opened door | 1077 |
| Weight in kg | 80 |
| Voltage in V | 220-240 |
| Fuse rating in A | 13 |
| Frequency in Hz | 50 |
| Total rated load in kW | 2,10-2,40 |
| Length of water inlet hose in m | 1,60 |
| Length of water drain hose in m | 1,50 |
| Length of supply lead in m | 2 |

WWD380 WCS PWash&Steam&9kg
W1 front-loader washing machine:
A -20 %* I 9 kg I 1400 rpm I SteamCare I QuickPowerWash I Miele@home

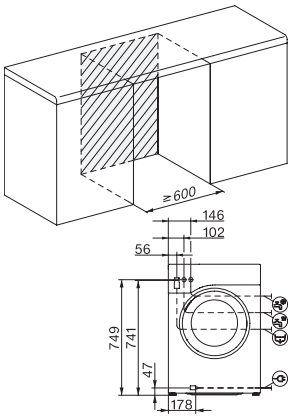


W1 drawing, facia 5 degree, measures in mm

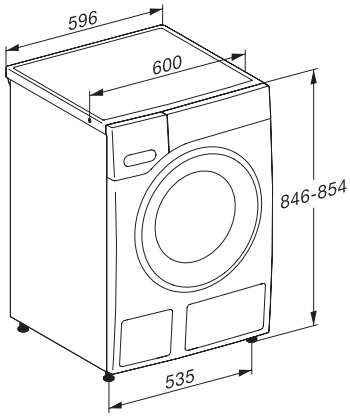


W1 drawing, facia 5 degree, measures in mm

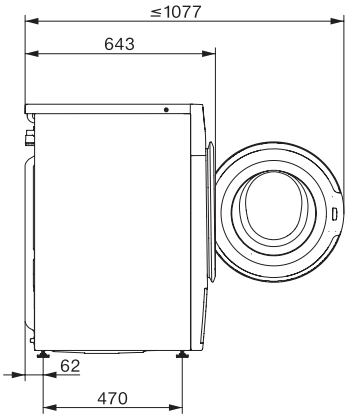


W1 drawing, facia 5 degree, measures in mm

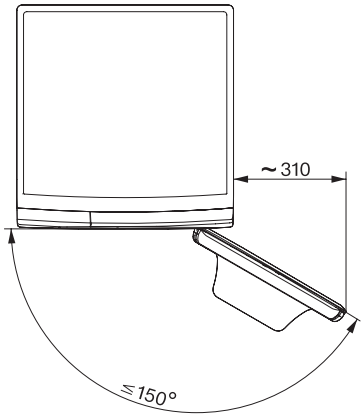


W1 drawing, facia 5 degree, measures in mm