TWD640WP EcoSpeed&9kg
T1 heat-pump dryer:
9 kg I DirectSensor I DryCare 40 I HygieneDry I Miele@home



- Tested for 20 years of perfect laundry care*
- Heat pump technology – low consumption, gentle drying
- Save time sorting your laundry; DryCare 40 is perfect for a 40 °C wash**
- EcoSpeed efficiently reduces the drying time by 20 minutes***
- HygieneDry removes up to 99.99 % of bacteria* and 99.9 % of viruses****

* During the development phase of the W1 / W2 washing machine series, Miele tested models and core components in 5000 wash loads (= 5 wash loads per week for 50 weeks per year) in various programmes. More: miele.com/20years

** Not suitable for woollens or silks.

*** Time savings calculated compared to Miele tumble dryers without EcoSpeed with the same load size and similar energy efficiency. Tested in the "Cottons" programme with a full load size.

**** Tested for Bacillus subtilis and Saccharomyces cerevisiae bacteria in the HygieneDry drying level with half load. A description of the relevant methodology can be found at the following link: https://www.miele.de/testkriterien-trockner

EAN: 4002516867975 / Material number: 12719170 /
Old Material Number: 12WD6402GB

General information	
Model identifier	TWD640WP EcoSpeed&9kg
Manufacturer material number	12719170
EAN number	4002516867975
Marketing class	Gold
Construction type	
Suitable for stacking	•
Door hinging	left, Reversible
Side-by-side	•
Slot-in	•
Model	
Product brand	T1 White Edition
Heat pump dryer	•
Design	
Appliance colour	Lotus white
Control panel colour	Lotus white
Door design	Obsidian black with white ring
Rotary selector colour	Lotus White
Control panel version	5° inclined
Control type	Rotary control
Display	DirectSensor white, 7 segment
Drying results	
PerfectDry precision drying	•
FragranceDos fragrance system	•
Intelligent drum reversal	•
HygieneDry	•
Gentle laundry care	
Honeycomb drum	•
Load in kg	9
User convenience	
Networking with Miele@home	•
Wash2Dry	•
Delay start up to 24 hours	•
Time left display	•
Programme sequence indicator	No
Drum lighting	LED
Condensate container	•
Integrated condensed water drainage	•
AddLoad	•
Efficiency	
EcoDry technology	•
Maintenance-free heat exchanger	•
ProfiEco motor	•
EcoSpeed	•

TWD640WP EcoSpeed&9kg
T1 heat-pump dryer:
9 kg I DirectSensor I DryCare 40 I HygieneDry I Miele@home



EAN: 4002516867975 / Material number: 12719170 /
Old Material Number: 12WD6402GB

Drying programmes	
Cottons (coloureds)	•
Cottons arrow	•
Minimum iron	•
Delicates	•
Shirts	•
Woollens handcare	•
Express	•
Proofing	•
Bed linen	•
Warm air/DryFresh	•
Drying extras	
Anti-crease	•
Buzzer	•
DryCare 40	•
Quality	
Soft ribs	•
Safety	
PIN-Code	•
Empty out container indicator	•
Clean filter indication	•
Optical interface	•
Technical data	
Dimensions (H x W x D) in mm	850 x 596 x 643
Dimensions in mm (width)	596
Dimensions in mm (height)	850
Dimensions in mm (depth)	643
Weight in kg	54
Voltage in V	220-240
Fuse rating in A	13
Frequency in Hz	50
Total rated load in kW	1,10
Length of supply lead in m	2,0
Hermetically sealed	•
Type of coolant	R290
Refrigerant quantity in kg	0,14
Refrigerant global warming potential in CO_2 e	3
Appliance global warming potential in CO_2 e	0,42
Replacing lamps	Service
Accessories included	
Fragrance flacon	•
Voucher for a second fragrance flacon	•

TWD640WP EcoSpeed&9kg
T1 heat-pump dryer:
9 kg I DirectSensor I DryCare 40 I HygieneDry I Miele@home

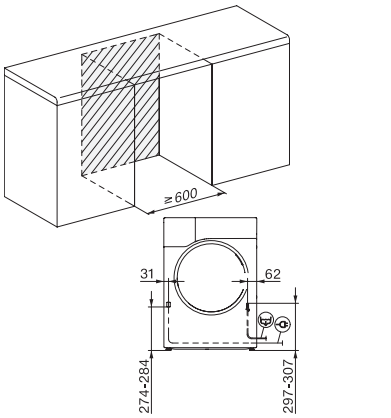

T1 installation drawing, facia 5 degree, measures in mm

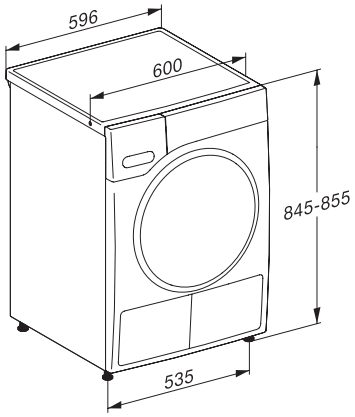

T1 drawing, facia 5 degree, measures in mm

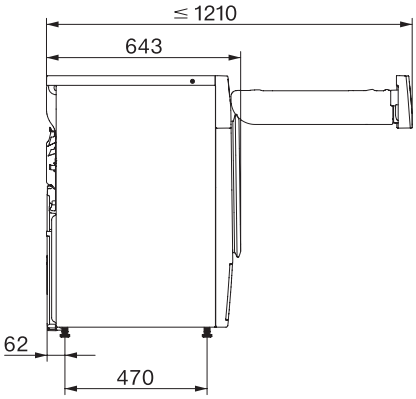

T1 drawing, facia 5 degree, with porthole, measures in mm

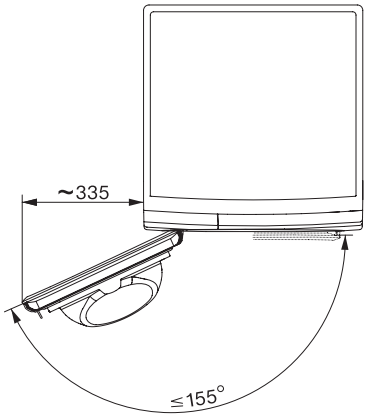

T1 drawing, facia 5 degree, measures in mm